Operation Manual	OM AGS-2
	Group: **Chiller**
	Part Number: **330412001**
	Date: **November 2002**
	Supersedes: OM AGS-1

GeneSys ™ Air-Cooled Screw Compressor Chiller

AGS 230B through AGS 475B

Software Version AGSU30101C

60 Hertz

Draft 2
12/02/02



McQuay®
Air Conditioning

Table Of Contents

FEATURES OF THE AGS CHILLER MICROTECH II™ CONTROLLER 4

GENERAL DESCRIPTION 5

COMPONENT DESCRIPTION 6

Unit and Circuit Controller Description 6

CONTROL OPERATION 7

CIRCUIT CONTROLLER 7

Inputs/Outputs 7
Setpoints 8
Compressor Control 10
Condenser Fan Control 14
EXV Control 16
Evaporator Oil Return Line Control 18
Oil Heater Control 18
Interstage Injection 18

UNIT CONTROLLER 19

Inputs/Outputs 19
Unit Enable 21
Unit Mode Selection 22
Evaporator Pump State Control 23
Evaporator Heater Control 23
Leaving Water Temperature (LWT) Reset 23

ALARMS AND EVENTS 26

Alarm and Event Logging 28

USING THE CONTROLLER 29

Security 31
Entering Passwords 31
Unit Controller Menus 32
SET Screen Definitions 35
Circuit Controller Menus 38
Screen Definitions 39
Entering Passwords 43
Editing Setpoints 43
Clearing Alarms 43

SEQUENCE OF OPERATION 44

START-UP AND SHUTDOWN 47

Extended (Seasonal) Shutdown 48
Evaporator Freeze Protection 49
Operating Limits: 51

BUILDING AUTOMATION SYSTEM INTERFACE 52

FIELD WIRING DIAGRAM 53

Our facility is **ISO Certified**

Initial Issue November 2002

© McQuay International, 2002
"McQuay" is a registered trademark of McQuay International, "Information covers the McQuay International products at the time of publication and we reserve the right to make changes in design and construction at anytime without notice"

This manual provides setup, operating, and troubleshooting information for the McQuay MicroTech II™ controller for Model AGS air-cooled rotary screw compressor chillers. Please refer to the current version of IMM AGS for information relating to the unit itself.

NOTE: This manual covers units with Software Version AGSU30101C. The software version number can be viewed by pressing the MENU and ENTER keys (the two right keys) simultaneously. Then, pressing the MENU key will return to the Menu screen.

⚠ WARNING

Electric shock hazard. Can cause personal injury or equipment damage. This equipment must be properly grounded. Connections to and service of the MicroTech II control panel must be performed only by personnel who are knowledgeable in the operation of the equipment being controlled.

⚠ CAUTION

Static sensitive components. A static discharge while handling electronic circuit boards can cause damage to the components. Discharge any static electrical charge by touching the bare metal inside the control panel before performing any service work. Never unplug any cables, circuit board terminal blocks, or power plugs while power is applied to the panel.

NOTICE

This equipment generates, uses and can radiate radio frequency energy and, if not installed and used in accordance with this instruction manual, may cause interference to radio communications. Operation of this equipment in a residential area is likely to cause harmful interference in which case the user will be required to correct the interference at his own expense.
McQuay International Corporation disclaims any liability resulting from any interference or for the correction thereof.

Temperature and Humidity Limitations

The MicroTech II controller is designed to operate within an ambient temperature range of -20°F to +149°F (-29°C to +65.1°C) with a maximum relative humidity of 95% (non-condensing).

Features of the AGS Chiller MicroTech II™ Controller

- Control of leaving chilled water within a ±0.2°F (±0.1°C) tolerance.
- Readout of the following temperature and pressure readings:
  - Entering and leaving chilled water temperature
  - Saturated evaporator refrigerant temperature and pressure
  - Saturated condenser temperature and pressure
  - Outside air temperature
  - Suction line, liquid line and discharge line temperatures – calculated superheat for discharge and suction lines – calculated subcooling for liquid line
- Automatic control of primary and standby evaporator pumps.
- History trend feature will constantly log chiller functions and setpoints. The controller will store and display all accumulated data for recall.
- Three levels of security protection against unauthorized changing of setpoints and other control parameters.
- Warning and fault diagnostics to inform operators of warning and fault conditions in plain language. All warnings, problems and faults are time and date stamped so there is no guessing of when the fault condition occurred. In addition, the operating conditions that existed just prior to shutdown can be recalled to aid in isolating the cause of the problem.
- Twenty-five previous faults and related operating conditions are available.
- Remote input signals for chilled water reset, demand limiting and unit enable.
- Manual control mode allows the service technician to command the unit to different operating states. This function can be useful for system checkout.
- Building Automation System (BAS) communication capability via LONWORKS® or BACnet® standard protocols for all BAS manufacturers.
- Service Test mode for troubleshooting controller hardware.
- Pressure transducers for direct reading of system pressures. Preemptive control of low evaporator pressure conditions and high discharge temperature to take corrective action prior to a fault trip.

General Description

The AGS MicroTech II distributed control system consists of microprocessor-based controllers that provide all monitoring and control functions required for the controlled, efficient operation of the chiller. The system consists of the following components:

- Unit Controller, one per chiller – controls unit functions and communicates with all other controllers. It is located in the control panel for circuit #1.
- Circuit Controller for each compressor/circuit on the chiller (two or three) that control compressor functions and can operate a compressor without the unit controller. The controllers are located in their circuit's control panel that is mounted between the condenser coil sections.

In addition to providing all normal operating controls, the MicroTech II control system monitors equipment protection devices on the unit and will take corrective action if the chiller is operating outside of its normal design conditions. If a fault condition develops, the controller will shut the compressor down and activate an alarm output. Important operating conditions at the time an alarm condition occurs are retained in the controller's memory to aid in troubleshooting and fault analysis.

The system is protected by a password scheme that allows access only by authorized personnel. The operator must enter the operator password into the controller's keypad before any setpoints can be altered.

Control Architecture

Figure 1, Major Control Components

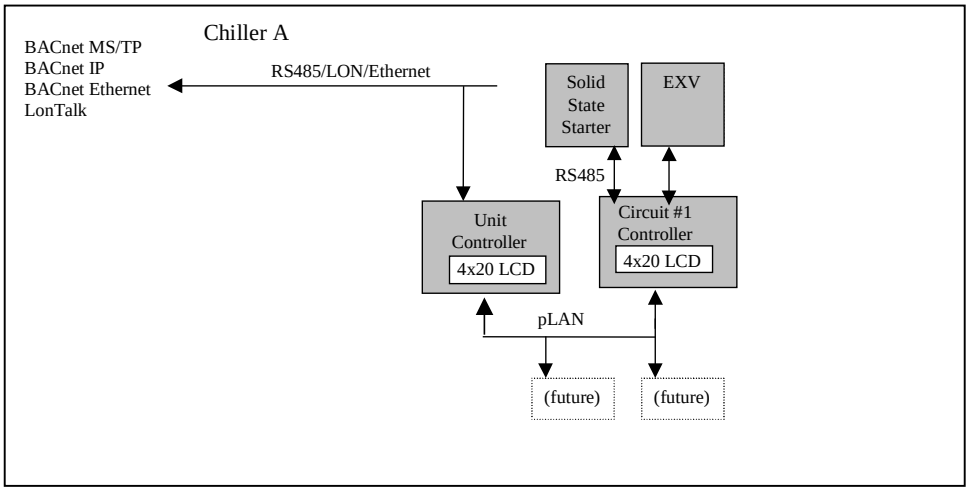

Component Description

Unit and Circuit Controller Description

Hardware Structure

The controllers are fitted with a 16-bit microprocessor for running the control program. There are terminals for connection to the controlled devices (for example: solenoid valves, expansion valves, chilled water pumps). The program and settings are saved permanently in FLASH memory, preventing data loss in the event of power failure without requiring a back-up battery. It also has remote communication access capability for a BAS interface.

Each chiller has one *unit* controller and a *circuit* controller for each compressor circuit (two or three depending on unit size). The controllers are connected and communicate via a pLAN. The circuit controllers communicate with, and control the operation of, the compressor's solid state starter and the circuit electronic expansion valve (EXV).

Keypad

A 4-line by 20-character/line liquid crystal display and 6-button keypad is mounted on the unit and compressor controllers, as shown below.

Figure 2, Keypad

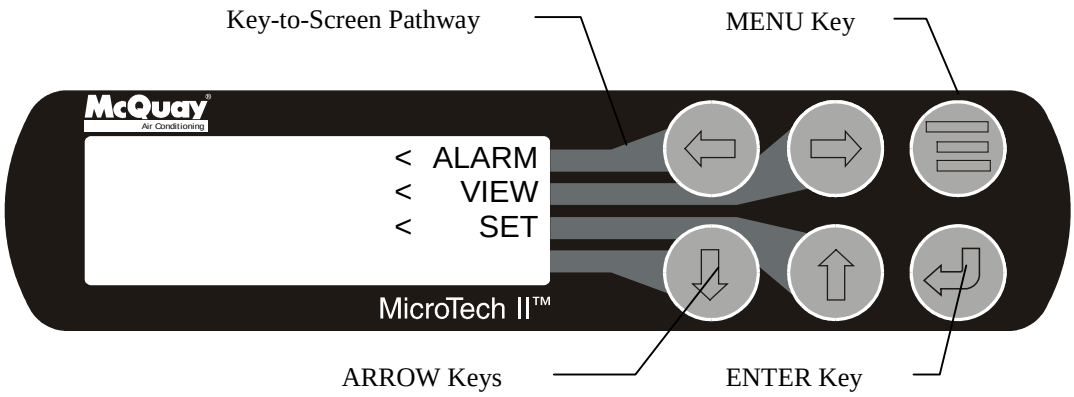

The four arrow keys (UP, DOWN, LEFT, RIGHT) have three modes of use.

- Scroll between data screens in the direction indicated by the arrows (default mode).
- Select a specific data screen in the menu matrix using dynamic labels on the right side of the display such as ALARM, VIEW, etc. (this mode is entered by pressing the MENU key). For ease of use, a pathway connects the appropriate button to its respective label on the screen.
- Change field values in setpoint programming mode according to the following table:

  LEFT key = Default RIGHT key = Cancel
  UP key = Increase (+) DOWN key = Decrease (-)

  These four programming functions are indicated by one-character abbreviation on the right side of the display. This programming mode is entered by pressing the ENTER key.

Control Operation

This section on MicroTech II control is divided into four subsections:

- Circuit Controller, explains the functions of the circuit controller, see page 7.
- Unit Controller, explains the functions of the unit controller, see page 19.
- Using the Controller, explains how to navigate through the menus and how to make entries, see page 29.
- Screen Definitions, details the content on the menu screens and how to use them, see page 33.

Circuit Controller

Inputs/Outputs

Table 1, Analog Inputs

#	Description	Signal Source	Range
1	Evaporator Pressure	0.1 to 0.9 VDC	0 to 132 psi
2	Condenser Pressure	0.1 to 0.9 VDC	3.6 to 410 psi
3	Liquid Pressure	0.1 to 0.9 VDC	3.6 to 410 psi
4	Suction Temperature	NTC Thermistor (10k@25°C)	-58°F to 212°F
5	Discharge Temperature	NTC Thermistor (10k@25°C)	-58° to 212°F
6	Liquid Temperature	NTC Thermistor (10k@25°C)	-58 to 212°F
7	Slide Load Indicator	4 to 20 mA	0 to 100%
8	Open		

These parameters are analog inputs to this controller. They are used internally as needed and are sent to the correct pLAN addresses for use by other controllers or displays.

Table 2, Analog Outputs

#	Description	Output Signal	Range
1	Fan 1&2 VFD	0 to 10 VDC	20 to 60 Hz
2	Open		
3	EXV Driver	0 to 10 VDC	0 to 1000 steps
4	Open		

These parameters are analog outputs from this controller. The values are sent to the correct pLAN addresses for use by other controllers or displays.

Table 3, Digital Inputs

#	Description	Signal	Signal
1	Circuit Switch	0 VAC (Off)	24 VAC (Auto)
2	Open		
3	Starter Fault	0 VAC (Fault)	24 VAC (No Fault)
4	VFD Fault	0 VAC (Fault)	24 VAC (No Fault)
5	Oil Differential Pressure Switch	0 VAC (Fault)	24 VAC (No Fault)
6	Mech High Pressure	0 VAC (Fault)	24 VAC (No Fault)
7	Low Pressure Switch	0 VAC (Fault)	24 VAC (No Fault)
8	Open		
9	Oil Level Sensor	0 VAC (Fault)	24 VAC (No Fault)
10	Open		
11	Open		

Table 4, Digital Outputs

#	Description	Load	Output OFF	Output ON	Voltage
1	Compressor SSS Contact	Relay	Compressor off	Compressor on	120
2	M1 Contactor (fan 1)	Contactor Coil	Fans off	Fans on	120
3	M2 Contactor (fan 2)	Contactor Coil	Fans off	Fans on	120
4	M3 Contactor (fan 3)	Contactor Coil	Fans off	Fans on	120
5	M4 Contactor (fan 4)	Contactor Coil	Fans off	Fans on	120
6	M5 Contactor (fan 5 & 6)	Contactor Coil	Fans off	Fans on	120
7	Load/Unload Pulse	Solenoid	Hold load slide	Move load slide	24
8	Load/Unload Select	Relay	Unload	Load	24
9	M7 Contactor (fan 7 & 8)	Contactor Coil	Fans off	Fans on	120
10	Oil Return Line	Solenoid	Closed	Open	
11	Open				
12	Open				
13	EXV Close Signal	Contact	EXV Follows 0 – 10 VDC	EXV Closed, Ignores 0 – 10 VDC	10

These parameters are digital outputs from this controller. Their values are sent to the correct pLAN addresses for use by other controllers or displays.

Setpoints

The following parameters are remembered during power off, are factory set to the **Default** value, and can be adjusted to any value in the **Range** column.

The PW (password) column indicates the password that must be active in order to change the setpoint. Codes are as follows:

O = Operator

M = Manager

Table 5, Circuit Controller Setpoints

Description	Default	Range	PW
Compressor			
Circuit mode	enable	Disable, enable, test	M
Slide control	auto	Auto, manual	M
Slide position	0	0-100	M
Compressor Size	205	205,220,235	M
Clear Cycle Timers	no	No, yes	M
Maximum Slide Target	100.0	0-100.0%	M
EXV			
EXV control	auto	Auto, manual	M
Manual EXV position	0	0-6386	M
Pre-open timer	60	20-120 sec	M
Service Pumpdown	No	No, Yes	M
Fans			
Fan VFD enable	Yes	No, Yes	M
Number of fans	6	6,8	M
Saturated Condenser Temp Target	110.0	90.0 – 130.0 ^{o}F	M
Stage 1 Up Deadband	5.0	1.0-20.0 ^{o}F	M
Stage 2 Up Deadband	8.0	1.0-20.0 ^{o}F	M
Stage 3 Up Deadband	10.0	1.0-20.0 ^{o}F	M
Stage 4 Up Deadband	12.0	1.0-20.0 ^{o}F	M
Stage 1 Down Deadband	8.0	1.0-20.0 ^{o}F	M
Stage 2 Down Deadband	7.0	1.0-20.0 ^{o}F	M
Stage 3 Down Deadband	6.0	1.0-20.0 ^{o}F	M
Stage 4 Down Deadband	5.0	1.0-20.0 ^{o}F	M
VFD Max Speed	100%	90 to 110%	M
VFD Min Speed	25%	20 to 60%	M
Forced FanTrol 1	1	1-8	M
Forced FanTrol 2	2	1-8	M
Forced FanTrol 3	3	1-8	M
Sensors			
Evap pressure offset	0	-10.0 to 10.0 psi	M
Cond pressure offset	0	-10.0 to 10.0 psi	M
Liquid pressure offset	0	-10.0 to 10.0 psi	M
Suction temp offset	0	-5.0 to 5.0 deg	M
Discharge temp offset	0	-5.0 to 5.0 deg	M
Liquid temp offset	0	-5.0 to 5.0 deg	M
Slide Minimum Position	0	-15 to 15%	M
Slide Maximum Position	0	-15 to 15%	M

Circuit Operating Mode

The circuits on the chiller can each be individually enable or disabled. Test mode on each circuit can also be entered independent of the all other circuits. With the circuit switch on, the circuit mode setpoint offers settings of either enable or disable. This simply allows the circuit to be disabled through a keypad setting.

Slide Position

Each compressor will estimate its slide load percentage from the present value of the slide load indicator. The percentage is based on the 4-20mA signal from the slide load indicator. A percentage value of 0 corresponds to approximately a 4mA signal, a percentage value of 100 corresponds to approximately a 20mA signal.

Compressor Control

Multiple Compressor Staging

This section defines which compressor is the next one to start or stop. The next section defines when the start, or stop, is to occur.

Functions

Can start/stop compressors according to an operator-defined sequence.

Can start compressors based on the number of starts (run hours if starts are equal) and stop on run hours.

The above two modes can be combined so that there are two or more groups where all compressors in the first group are started (based on number of starts/hours) before any in the second group, etc. Conversely, all compressors in a group are stopped (based on run hours) before any in the preceding group, etc.

Required Parameters

1. Sequence number setpoint (SQ#_SP) for all compressors. Possible settings = (1-3).
2. Maximum Number of compressors ON setpoint (MAX_ON_SP). Possible settings = (1-3).
3. Number of starts for all compressors.
4. Number of run hours for all compressors.
5. Status of all compressors (Available/Unavailable, Pumping down, Running, etc.).

Multiple Compressor Start/Stop Timing

This section defines when a compressor is to start, or stop, and the scenario for doing so.

Required Parameters

1. Startup_Delta_T setpoint.
2. Stage_Delta_T setpoint
3. Stop Delta_T setpoint
4. LWT error (See definition under Compressor Capacity Control section.)
5. LWT Slope (Increasing temperature is “+” slope)
6. Full load indicator for each compressor
7. Stage_Up_Now flag (used as a necessary, but not sufficient condition for starting)
8. Stage_Down_Now flag (used as a necessary, but not sufficient condition for stopping)

Starting

Staging up, no compressors on the unit are running:
The first compressor can start when the LWT is more than the sum of the active LWT setpoint and the Startup Delta-T. For example, with default settings the active setpoint would be 44 F, and the startup delta would be 10 F. In this case, the LWT must be greater than 54 F. This is a necessary, but not sufficient condition for starting the first compressor.

Staging up, at least one compressor is already running:
Additional compressors can start when the LWT is more than the sum of the active LWT setpoint and the Stage Delta-T. With the default settings the active setpoint is 44 F, and the stage delta would be 2 F. So, one necessary condition for staging a compressor on is that the LWT must be higher than 46 F.

If in Cool Mode, an additional requirement is that all running compressors are running at their maximum capacity, or at least 75%, slide position. A compressor is considered to be at its maximum capacity if it is in an inhibit or unload situation due to low evap pressure, high condenser pressure, or low discharge superheat. If a compressor is set for manual slide control, or the slide target has reached the maximum allowed by the Max Slide setpoint, it will also be flagged as being at maximum capacity.

Stopping

Staging down, at least two compressors running:
For staging off compressors, the LWT must be less than the active LWT setpoint minus the Stage Delta-T. Based on default settings, the active setpoint would be 44 F, and stage delta is 2 F. So the LWT must be less than 42 F to stage off a compressor. This is a sufficient condition to trigger a stage down.

Staging down, one compressor running:
With one compressor left running, the stage off requires that the LWT be less than the active LWT setpoint minus the Stop Delta-T. With default settings the active setpoint is 44 F, and the stop delta is 3 F, so the LWT must be less than 41 F to stage off the last compressor. This is a sufficient condition to trigger a stage down.

History Storage
The number of starts and total compressor run hours is maintained in non-volatile memory and placed on the pLAN.

Compressor Capacity Control
Compressor capacity is determined by calculating a slide position target. Adjustment to the slide target for normal running conditions occurs every 10 seconds. For loading a maximum change of 1% is allowed, and for unloading a maximum change of 2% is allowed. The change to the target is calculated as follows.

Cool Mode
When the chiller is in COOL mode, capacity of the compressor is adjusted to maintain leaving water temperature at the Active LWT setpoint while balancing the load between running circuits. Load balance offset, LWT error, and LWT slope are used to calculate a change in slide position as described below.

Load balance offset:
Balance Offset = 0.3% if slide target > avg target, 0% if slide target <= avg target

LWT Error:
LWT Error = (Leaving Evaporator Water Temp) – (Active LWT setpoint).

LWT slope:
Slope (deg/minute) = sum of last five LWT changes as calculated every 12 seconds

Slide target adjustment = [LWT Error + (LWT Slope x 2) – Load Balance Offset] / # Compressors Running

Ice Mode

In ICE mode, the compressor capacity is increased at the maximum rate continuously until reaching the maximum slide position. Load balancing, LWT error, and LWT slope are ignored.

Capacity Overrides – Limits of Operation

The following conditions override the automatic slide control when the chiller is in COOL mode or ICE mode. These overrides keep the circuit from entering a condition in which it is not designed to run. Any compressor running with capacity limits because of these conditions will be considered to be at full load in the compressor staging logic.

Low Evaporator Pressure

If the compressor is running and the evaporator pressure drops below the Low Evaporator Pressure-Hold setpoint, the compressor will not be allowed to increase capacity. The slide position target will be limited to a maximum value equal to the target at the time the hold condition was triggered. This limit will be active until the evaporator pressure reaches the hold setpoint plus 3 psi.

If the compressor is running above minimum load capacity and the evaporator pressure drops below the Low Evaporator Pressure-Unload setpoint, the compressor will begin reducing capacity. The maximum allowed slide target will be adjusted down 5% every 5 seconds until the evaporator pressure rises above the Low Evaporator Pressure-Unload setpoint. The slide target will then be limited to the current value until the evaporator pressure rises to the unload setpoint plus 3 psi.

High Condenser Pressure

If the compressor is running and the condenser pressure rises above the High Lift Pressure Hold setpoint, the compressor will not be allowed to increase capacity. The slide position target will be limited to a maximum value equal to the target at the time the hold condition was triggered. This limit shall be active until the condenser pressure drops 10 psi below the hold setpoint.

If the compressor is running above minimum load capacity and the condenser pressure rises above the High Condenser Pressure Unload setpoint, the compressor will begin reducing capacity. The maximum allowed slide target will be adjusted down 5% every 5 seconds until the condenser pressure drops below the High Condenser Pressure-Unload setpoint. The slide target will then be limited to the current value until the condenser pressure drops to 10 psi below the unload setpoint.

Low Discharge Superheat

If the compressor is running and the discharge superheat is less than 22°F, the compressor will not be allowed to increase capacity. This limit will be active until the superheat is more than 22°F.

If the compressor is running above minimum load capacity and the discharge superheat is less than 20°F, then the compressor will begin reducing capacity. The slide target will be adjusted down 2% every 5 seconds as long as the superheat remains below 20°F.

Maximum LWT Pulldown Rate

The maximum rate at which the leaving water temperature can drop is limited by the Maximum Rate setpoint. A slope unload factor is used to reduce the slide target if the pulldown rate exceeds the Maximum Rate setpoint.

Slope Unload Factor: Maximum Rate + LWT slope

If the pulldown rate is too fast, then the slide adjustment made will be equal to the slope unload factor.

Unit Capacity Overrides

The following conditions override the automatic slide control when the chiller is in COOL mode only. Multiple limits may be active at any time, and the lowest limit is always used in the compressor capacity control.

These limits represent a limit on the unit capacity as a whole. Therefore, an estimate of the current unit capacity is needed. Any circuit that is off is running at 0% of its capacity. A running circuit is assumed to be running at a minimum of 20% capacity, and the assumed capacity will very linearly from 20% to 100% as the slide position varies from 0% to 100%. The unit capacity is calculated using the following formula:

Unit Capacity = (Cir1 Capacity + Cir2 Capacity + {Cir3 Capacity}) / Number of Circuits

If the unit capacity is greater than the active capacity limit, then no circuit will increase slide position. If the unit capacity is greater than the active limit plus 10%, the circuits will unload until the unit capacity is less than 10% greater than the active limit.

Soft Load

Soft Loading is a configurable function used to ramp up the unit capacity over a given time. The setpoints that control this function are:

- Soft Load – (ON/OFF)
- Begin Capacity Limit – (Unit %)
- Soft Load Ramp – (seconds)

The Soft Load Unit Limit increases linearly from the Begin Capacity Limit setpoint to 100% over the amount of time specified by the Soft Load Ramp setpoint. If the option is turned off, the soft load limit is set to 100%.

Demand Limit

The maximum unit capacity can be limited by a 4 to 20 mA signal on the Demand Limit analog input. This function is only enabled if the Demand Limit setpoint is set to ON. The maximum unit capacity decreases linearly from 100% (at 20 mA) to the 0% (at 0mA).

Network Limit

The maximum slide load percentage of the compressor can be limited by a value sent through a BAS network connection and stored in the Network Limit variable. This function will be enabled if the control source is set to BAS.

Pumpdown

When a circuit reaches a condition where the compressor needs to shut down normally, a pumpdown will be performed. The slide target will automatically go to 0 while pumping down, and the compressor will run until the pumpdown pressure has been reached, or the pumpdown time has been exceeded.

Service Pumpdown

If the option for a service pumpdown is enabled, then on the next pumpdown the pressure setpoint will be 15 psi. The circuit will pumpdown to this pressure and shut off. When the compressor has completed the service pumpdown, the setpoint is reset to no.

Manual Slide Control Mode

The slide position on each circuit may be controlled manually. A setting on the compressor setpoints screen in each circuit controller allows the operator to select manual slide control. On the same screen, a slide target can be selected, from 0% to 100%.

Anytime a circuit is in manual slide control, it is considered to be at full load in the staging logic. It also will not be considered a running compressor for load balancing purposes. None of the capacity limits outlined above will apply in manual slide control, but all stop alarms are still applicable.

Slide Positioning

Slide Load Indicator

Each compressor will estimate its slide load percentage from the present value of the slide load indicator. The percentage is based on the 4-20mA signal from the slide load indicator. A percentage value of 0 corresponds to approximately a 4mA signal, a percentage value of 100 corresponds to approximately a 20mA signal.

Load/Unload Select

The load/unload selector determines which solenoid will be pulsed for a change in capacity. When unloading is required, the load/unload select output should be off. When loading of the compressor is required, the output should be on.

Slide Pulse

The slide pulse output moves the compressor slide in order to reach the capacity reflected by the slide position target. The output will pulse for 200 ms every 3 seconds until the slide position is within a 3% deadband around the target.

Condenser Fan Control

The compressor must be running in order to stage fans on.

VFD (Optional)

Condenser pressure trim control is accomplished using an optional variable frequency drive (VFD) on the first two fans that turn on. This VFD control uses a proportional integral function to drive the saturated condenser temperature to a target value by changing the fan speed. The target value is normally the same as the saturated condenser temperature target setpoint.

If a fan VFD is present on the circuit, the VFD will start the fans when the saturated condenser temperature goes above the temperature target.

Stage Up Compensation

In order to create a smoother transition when another fan is staged on, the VFD compensates by slowing down initially. This is accomplished by adding the new fan stage up deadband to the VFD target. The higher target causes the VFD logic to decrease fan speed. Then, every 10 seconds, 0.5°F is subtracted from the VFD target until it is equal to the saturated condenser temperature target setpoint. This will allow the VFD to slowly bring the saturated condenser temperature back down.

FanTrol

Fan Stages Without VFD Option

If the VFD option is not enabled, there are 8 stages of FanTrol available with 8 fan circuits, and 6 stages available on 6 fan circuits. Although fans 5/6 and 7/8 are controlled by one contactor each, more stages are created by using virtual stages. See the table below:

Table 6, Staging without VFD

FanTrol Stage	Fans On
1	1
2	1,2
3	1,2,3
4	1,2,3,4
5	1,2,4,5,6
6	1,2,3,4,5,6
7	1,2,3,5,6,7,8
8	1,2,3,4,5,6,7,8

Fan Stages with VFD Option

When the VFD option is enabled, the first two fans are controlled by the fan VFD. This leaves 6 stages of FanTrol available with 8 fan circuits, and 4 stages available on 6 fan circuits. Although fans 5/6 and 7/8 are controlled by one contactor each, more stages are created by using virtual stages. See the table below:

Table 7, Staging with VFD

FanTrol Stage	Fans On
1	1,2,3
2	1,2,3,4
3	1,2,4,5,6
4	1,2,3,4,5,6
5	1,2,3,5,6,7,8
6	1,2,3,4,5,6,7,8

Staging Up

There are four stage-up deadbands that apply to the FanTrol stages. Stages one through three use their respective deadbands. Stage four to eight share the fourth stage-up deadband.

When the saturated condenser temperature is above the Target + the active deadband, a Stage Up error is accumulated.

Stage Up Error Step = Saturated Condenser Refrigerant temperature – (Target + stage up deadband)

The Stage Up Error Step is added to Stage Up Accumulator once every Stage Up Error Delay seconds. When Stage Up Error Accumulator is greater than the Stage Up Error Setpoint, another stage is added.

When a stage up occurs or the saturated condenser temperature falls back within the Stage Up deadband the Stage Up Accumulator is reset to zero.

Forced Fan Stage At Start

Fans may be started simultaneously with the compressor based on outdoor ambient temperature. When the compressor starts, a FanTrol stage is forced based on the following table.

Table 8, Forced Staging

Outside Air Temperature	FanTrol Stage At Start
> 75 ^{o}F	Forced FanTrol 1 SP
> 90 ^{o}F	Forced FanTrol 2 SP
> 105 ^{o}F	Forced FanTrol 3 SP

Staging Down

There are four Stage Down deadbands. Stages one through three use their respective deadbands. Stages four to eight share the fourth Stage Down deadband.

When the saturated condenser refrigerant temperature is below the Target – the active deadband, a Stage Down error is accumulated.

Stage Down Error Step = (Target - Stage Down deadband) - Saturated Condenser Refrigerant temperature

The Stage Down Error Step is added to Stage Down Accumulator once every Stage Down Error Delay seconds. When the Stage Down Error Accumulator is greater than the Stage Down Error Setpoint, another stage of condenser fans turned off.

When a stage down occurs, or the saturated temperature rises back within the Stage Down deadband the Stage Down Error Accumulator is reset to zero.

EXV Control

Three different expansion valve (EXV) control modes are used. Any time the EXV is not in one of these control modes, it will be closed. For any of the control modes, the EXV position is limited to a range based on the slide position target. The table below shows the EXV range for each size compressor at minimum and maximum capacity. The minimum and maximum values vary linearly with slide position, defining a new EXV control range for every change in slide position.

Table 9, EXV Range

EXV	Slide %	Compressor Size		
		205mm	220mm	235mm
Min	0	250	250	250
Max	0	3000	3000	3000
Min	100	870	1080	1300
Max	100	3400	4200	5000

Based on the values in the above table, the EXV control range varies as shown in the figure below. The shaded area is the control range.

Figure 3, EXV Control Range

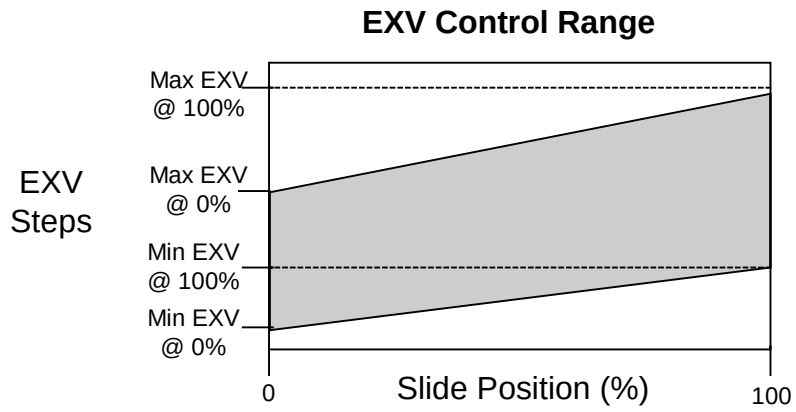

Pre-Open

At the time of a start request, the EXV will perform a pre-open function. This is to provide sufficient liquid refrigerant resides in the evaporator to avoid low pressure situations at startup. During pre-open, the EXV will open to 3000 steps while the saturated evaporator temperature is less than the LWT. The EXV will move to 250 steps when the saturated evaporator temperature is equal to, or greater than, the LWT.

The EXV must be in the pre-open state for a time equal to the pre-open timer setpoint before the compressor will start. This state may be skipped if the start request occurs and the evaporator saturated temperature is greater than LWT + 5°F. In this case, the EXV would go straight to pressure control.

Pressure Control

The EXV will be in pressure control mode after startup. In this mode, the EXV controls discharge superheat with adjustments to the evaporator pressure target. A proportional integral function is used to keep the evaporator pressure at the target.

The base pressure target is calculated using the following formula:

Base target = 2/3LWT – 8

The base target is limited to a range from the low pressure inhibit setpoint plus 2 psi, up to 52 psi.

The pressure control target may be adjusted if the discharge superheat is not within an acceptable range. If the superheat is less than 22°F, the base pressure target will be reduced by a value equal to the low superheat error. If the superheat is more than 40°F, the base pressure target will be increased by a value equal to the high superheat error. At any time, the adjusted target pressure cannot go below the low pressure inhibit setpoint plus 2 psi, or above 52 psi.

The transition from pressure control to subcool control requires the following conditions to be true:

a) Discharge Superheat > 22°F for at least 30 seconds while in pressure control

b) LWT <= 60°F

c) Subcool > current base subcool value OR EXV steps > (max EXV steps – 100)

If condition (a) is met and the other conditions have not been met, the compressor may begin increasing capacity while still in pressure control.

Subcool Control

After completing pressure control, the EXV transitions to the primary mode of operation, subcool control. In this mode, subcooling is controlled by the EXV, with adjustments to the subcool target based on discharge superheat. The base subcool target varies linearly from 9°F to 20°F as slide position changes from 0 to 100%.

The base subcool target value is adjusted when the discharge superheat is less than 22°F or greater than 40°F. For every degree below the minimum, the subcool target is adjusted up one degree. Similarly, for every degree above the maximum, the subcool target is adjusted down one degree. The maximum offset to the base subcool value is 15°F, and the adjusted subcool target is limited to a minimum of 2°F.

When the circuit initially enters subcool control, the subcool target is set to the current subcool value less two degrees. The target subcool value is then reduced 0.1 degrees every two seconds until it reaches the calculated target value.

The EXV may transition from subcool control back to pressure control. This occurs when the LWT is greater than 63°F.

Closed

Any time the EXV is not in pre-open, pressure control, or subcool control, it will be in a closed state. At this time, the EXV position is 0 steps and the EXV close signal is active.

Manual EXV Control

The EXV position can be set manually. Manual control can only be selected when the compressor is in the run state. At any other time, the EXV control setpoint is forced to auto.

When EXV control is set to manual, the EXV position is equal to the manual EXV position setting. If set to manual when the compressor state transitions from run to another state, the control setting is automatically set back to auto.

Evaporator Oil Return Line Control

The oil return solenoid shall be on any time the compressor is running and any of the following occurs:

Slide position target < 60 AND Discharge superheat > 20

Slide position target >= 60 AND Discharge superheat > 50

Oil Level input = open AND Discharge superheat > 20

Oil Heater Control

The oil heater shall be on when the compressor is not running AND the oil level input is closed.

Interstage Injection

The interstage injection is activated when the compressor is running AND the discharge temperature rises above 185°F. The output shall be turned off when either the compressor is no longer running, OR the discharge temperature drops below 170°F.

Inputs/Outputs

The following parameters are analog inputs to this controller. They are used internally as needed and are sent to the correct pLAN addresses for use by other controllers or displays.

Table 10, Unit Analog Inputs

#	Description	Signal Source	Range
1	Outdoor Ambient Temperature	NTC Thermistor (10k@25°C)	-58°F to 212°F
2	Leaving Evaporator Water Temperature	NTC Thermistor (10k@25°C)	-58°F to 212°F
3	Entering Evaporator Water Temperature	NTC Thermistor (10k@25°C)	-58°F to 212°F
4	Demand Limit	4-20 mA Current	25-100 %RLA
5	Chilled Water Reset	4-20 mA Current	0 to max reset

The following parameters are digital inputs to this controller. They are used internally as needed and are sent to the correct pLAN addresses for use by other controllers or displays. The status of digital inputs may be viewed on Unit Status screen #4, on the unit controller only.

Table 11, Unit Digital Inputs

#	Description	Signal	Signal
1	Unit Switch	0 VAC (Stop)	24 VAC (On)
2	Remote Switch	0 VAC (Stop)	24 VAC (Start)
3	Evaporator Water Flow Switch	0 VAC (No Flow)	24 VAC (Flow)
4	Mode Switch	0 VAC (Cool)	24 VAC (Ice)
5	Open		
6	Open		

The following parameters are digital outputs from this controller. Their values are sent to the correct pLAN addresses for use by other controllers or displays. The status of digital outputs may be viewed on Unit Status screen #4, on the unit controller only.

Table 12, Unit Digital Outputs

#	Description	Load	Output OFF	Output ON
1	Open			
2	Evaporator Water Pump 1	Pump Contactor	Pump OFF	Pump ON
3	Evaporator Water Pump 2	Pump Contactor	Pump OFF	Pump ON
4	Evap Heaters	Heater relay	Heater OFF	Heater ON
5	Open			
6	Open			
7	Open			
8	Alarm	Remote Alarm	No Alarm	Stop Alarm

Setpoints

The “Type: column defines whether the setpoint is part of a coordinated set of duplicate setpoints in different controllers. There are two possibilities as given below:

- N = Normal setpoint - Not copied from, or copied to, any other controller
- M = Master setpoint - Setpoint is copied to all controllers in the “Sent To” column

At power-up, the slave node checks if the master node is operational and if so, it sets its copy of the setpoint equal to the master’s. Otherwise, the setpoint remains unchanged. During normal operation, any time the master setpoint changes, the slave is updated as well.

The PW (password) column indicates the password that must be active in order to change the setpoint. Codes are as follows:

O = Operator, M = Manager

Table 13, Unit Controller Setpoints

Description	Default	Range	Type	PW
Unit				
Unit Enable	OFF	OFF, ON	N	O
Unit Mode	COOL	COOL, COOL w/Glycol, ICE w/Glycol, TEST	M	O
Available Modes	COOL	COOL, COOL w/Glycol, COOL/ICE w/Glycol, ICE w/Glycol, TEST	N	M
Control source	SWITCHES	SWITCHES, KEYPAD, NETWORK	N	O
Display Units				
Language				
BAS Protocol	NONE	NONE, BACnet, LonWorks, CAREL, MODBUS, N2	N	M
Ident number	1	0=200	N	M
Baud Rate	19200	1200, 2400, 4800, 9600, 19200	N	M
Cool LWT	44. 0°F	25.0(40.0) to 60.0 °F	M	O
Ice LWT	25.0°F	25.0 to 38.0°F	M	O
Startup Delta-T	10.0 degF	0.0 to 10.0 degF	M	O
Stop Delta-T	3.0 degF	0.0 to 3.0 degF	M	O
Stage Delta-T	2.0 degF	0.0 to 3.0 degF	M	O
Max Pulldown	0.5 degF/min	0.1-5.0 degF/min	M	M
Evap pump control	#1 Only	#1 Only, #2 Only	N	M
Evap Recirculate	30 sec	0 to 300 sec	N	M
LWT Reset Type	NONE	NONE, RETURN, 4-20mA, OAT	N	M
Max Reset	0.0 degF	0.0 to 20.0 degF	N	M
Start Reset Delta-T	10. 0 degF	0.0 to 20.0 degF	N	M
Soft Load	no	No, yes	N	M
Begin Capacity Limit	40%	20-100%	N	M
Soft Load Ramp	20 min.	1-60 min.	N	M
Demand Limit	no	No,yes	N	M
Compressors				
Sequence # Cir 1	1	1-3	M	M
Sequence # Cir 2	1	1-3	M	M
Sequence # Cir 3	1	1-3	M	M
Max Compressors On	3	1-3	M	M
Start-start timer	20 min	15-60 minutes	M	M
Stop-start timer	5 min	3-20 minutes	M	M
Number of Compressors	2	2-3	N	M
Pumpdown pressure	25.0 psi	10.0-30.0 psi	M	M
Pumpdown time limit	120 sec	0-180 sec	M	M
Alarms				
Low Evap Pressure-Unload	28 psi	15(28) to 45 psi	M	M
Low Evap Pressure-Hold	30 psi	15(30) to 45 psi	M	M
Low Oil Level Delay	120 sec	10-180 sec	M	M
High Oil Press Diff Delay	15 sec	0-60 sec	M	M
Min Lift Delay	30 sec	10-120 sec	M	M
High Discharge Temperature	200° F	150 to 200 F	M	M
Low Subcooling	5 degF	0 to 10 degF	M	M
Evap Flow Proof	3 sec	3 to 120 sec	N	M
Low Ambient Lockout	55 °F	0(35) to 70 °F	N	M
Evaporator Water Freeze	36 °F	15(34) to 42 °F	N	M
Sensors				
OAT sensor offset	0 degF	-5.0 to 5.0 degF	N	M
LWT sensor offset	0 degF	-5.0 to 5.0 degF	N	M
EWT sensor offset	0 degF	-5.0 to 5.0 degF	N	M

These parameters are remembered during power off, are factory set to the **Default** value, and can be adjusted to any value in the **Range** column.

Automatic Adjusted Limits

The following setpoint ranges will be adjusted based on selected options.

Table 14, Evaporator Leaving Water Temperature Range

Mode	Range
Unit Mode = Cool	40 to 60°F
Unit Mode = Cool w/Glycol, Ice, Ice w/ Glycol	20 to 60°F

Table 15, Evaporator Freeze Temperature Range

Mode	Range
Unit Mode = Cool	34 to 42°F
Unit Mode = Cool w/Glycol, Ice, Ice w/ Glycol	15 to 42°F

Table 16, Low Evaporator Pressure Inhibit

Mode	Range
Unit Mode = Cool	30 to 45 Psig
Unit Mode = Cool w/Glycol, Ice w/ Glycol	15 to 45 Psig

Table 17, Low Evaporator Pressure Unload

Mode	Range
Unit Mode = Cool	28 to 45 Psig
Unit Mode = Cool w/Glycol, Ice w/ Glycol	15 to 45 Psig

Table 18, Low Ambient Lockout Temperature Range

Fan VFD	Range
Fan VFD = N	35– 60°F
Fan VFD = Y	0 – 60°F

Unit Enable

Enabling and disabling the chiller is controlled by the Unit Enable Setpoint with options of OFF and ON. This setpoint can be altered by the Unit OFF input, Remote input, keypad entry, and BAS request. The Control Source Setpoint determines which sources can change the Unit Enable Setpoint with options of SWITCHES, KEYPAD or NETWORK.

Changing the Unit Enable Setpoint can be accomplished according to the following table. NOTE: An “x” indicates that the value is ignored.

Table 19, Unit Enable Settings

Unit Off Input	Control Source Setpoint	Remote Input	Key-pad Entry	BAS Request	Unit Enable
OFF	x	x	x	x	OFF
x	SWITCHES	OFF	x	x	OFF
ON	SWITCHES	ON	x	x	ON
ON	KEYPAD	x	OFF	x	OFF
ON	KEYPAD	x	ON	x	ON
ON	NETWORK	x	x	OFF	OFF
ON	NETWORK	OFF	x	x	OFF
ON	NETWORK	ON	x	ON	ON

All methods of disabling the chiller, except for the unit switch, will cause a normal shutdown of any running circuits. Any time the unit switch is used to disable the chiller, all running circuits will shut down immediately, without pumping down.

Unit Mode Selection

The overall operating mode of the chiller is set by the Unit Mode Setpoint with options of COOL, COOL w/Glycol, ICE w/Glycol, and TEST. This setpoint can be altered by the keypad, BAS, and Mode input. Changes to the Unit Mode Setpoint are controlled by two additional setpoints.

- Available Modes Setpoint: Determines the operational modes available at any time with options of COOL, COOL w/Glycol, COOL/ICE w/Glycol, and TEST
- Control Source Setpoint: Determines the source that can change the Unit Mode Setpoint with options of KEYPAD (pCO^2), NETWORK, or SWITCHES.

When the Control source is set to KEYPAD, the Unit Mode stays at its previous setting until changed by the operator. When the Control source is set to BAS, the most recent BAS mode request goes into effect even if it changed while the Control source was set to KEYPAD or DIGITAL INPUTS.

Changing the Unit Mode Setpoint can be accomplished according to the following table. NOTE: An "x" indicates that the value is ignored.

Table 20, Unit Mode Settings

Control Source Setpoint	Mode Input	Keypad Entry	BAS Request	Available Modes Setpoint	Unit Mode
x	x	x	x	COOL	COOL
x	x	x	x	COOL w/Glycol	COOL w/Glycol
SWITCHES	OFF	x	x	COOL/ICE w/Glycol	COOL w/Glycol
SWITCHES	ON	x	x	COOL/ICE w/Glycol	ICE w/Glycol
KEYPAD	x	COOL w/Glycol	x	COOL/ICE w/Glycol	COOL w/Glycol
KEYPAD	x	ICE w/Glycol	x	COOL/ICE w/Glycol	ICE w/Glycol
NETWORK	x	x	COOL	COOL/ICE w/Glycol	COOL w/Glycol
NETWORK	x	x	ICE	COOL/ICE w/Glycol	ICE w/Glycol
x	x	x	x	ICE w/Glycol	ICE w/Glycol
x	x	x	x	TEST	TEST

Unit Test Mode

The unit test mode allows manual testing of all controller outputs. Entering this mode requires the following conditions.

- Unit OFF input = OFF (i.e., the entire chiller is shut down).
- Manager password active.
- Available Unit Mode setpoint = TEST

A test menu can then be selected to allow activation of the outputs. It is possible to switch each digital output ON or OFF and set the analog outputs to any value.

Evaporator Pump State Control

The state-transition diagram shown below controls operation of the evaporator pump.

Figure 4, Evaporator Pump Control

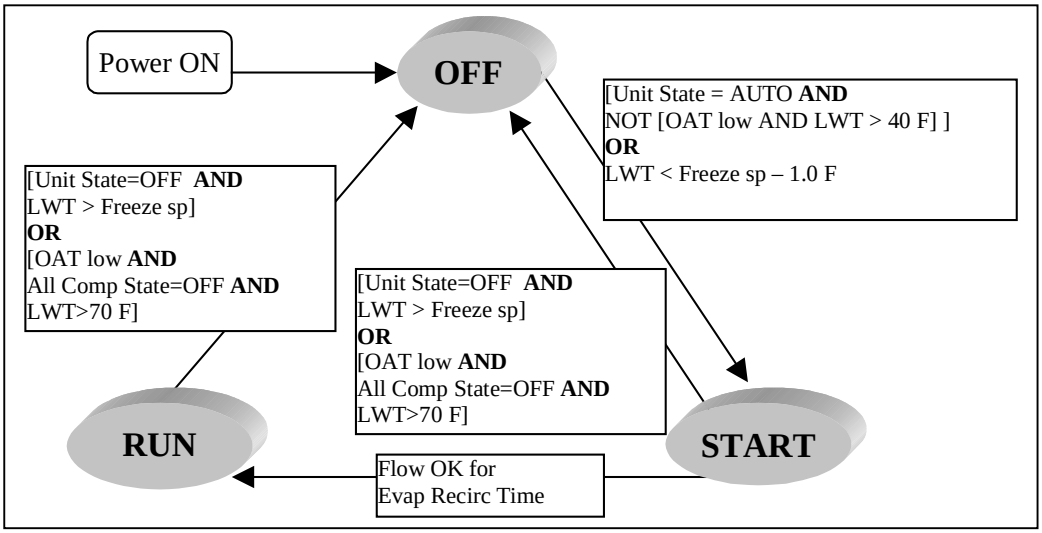

The pump output used will be determined by the Evap Pump Control setpoint. This setting allows the operator to select either pump #1 or pump #2. The selected output will be ON if the Evap State is set to START or RUN. Both outputs will be OFF if the Evap State is set to OFF.

Evaporator Heater Control

Evaporator heaters are controlled by the unit controller. This output is turned on when the evaporator LWT is less than the water freeze setpoint + 2 degF. The output is turned off when the LWT is more than the freeze setpoint + 4 degF.

Leaving Water Temperature (LWT) Reset

The Active Leaving Water variable shall be set to the current Leaving Water Temperature (LWT) setpoint unless the unit is in COOL mode and any of the reset methods below are selected. The type of reset in effect is determined by the LWT Reset Type setpoint. The Active Leaving Water variable is sent to all circuits for capacity control after the applicable reset is applied.

Reset Type – NONE

The Active Leaving Water variable is set equal to the current LWT setpoint.

Reset Type – RETURN

The return water temperature adjusts the Active Leaving Water variable. When the chiller mode = COOL, the Active Leaving Water variable is reset using the following parameters:

1. Cool LWT setpoint
2. Max Reset Delta-T setpoint
3. Start Reset Delta-T setpoint
4. Evap Delta-T

Reset is accomplished by changing the Active Leaving Water variable from the Cool LWT setpoint to the Cool LWT setpoint + Max Reset setpoint as the EWT – LWT (Evap Delta-T) varies from the Start Reset Delta-T setpoint to 0.

Figure 5, Return Water Reset Conditions

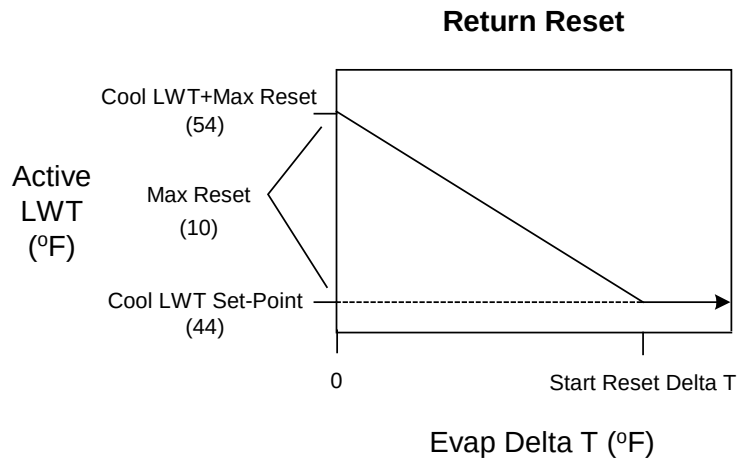

Reset Type – 4-20 mA

The Active Leaving Water variable is adjusted by the 4 to 20 mA reset analog input. Parameters used:

1. Cool LWT setpoint
2. Max Reset setpoint
3. LWT Reset signal

Reset is 0 if the reset signal is less than or equal to 4 mA. Reset is equal to the Max Reset Delta-T setpoint if the reset signal equals or exceeds 20 mA. The amount of reset will vary linearly between these extremes if the reset signal is between 4 mA and 20 mA.

Figure 6, External Reset Conditions

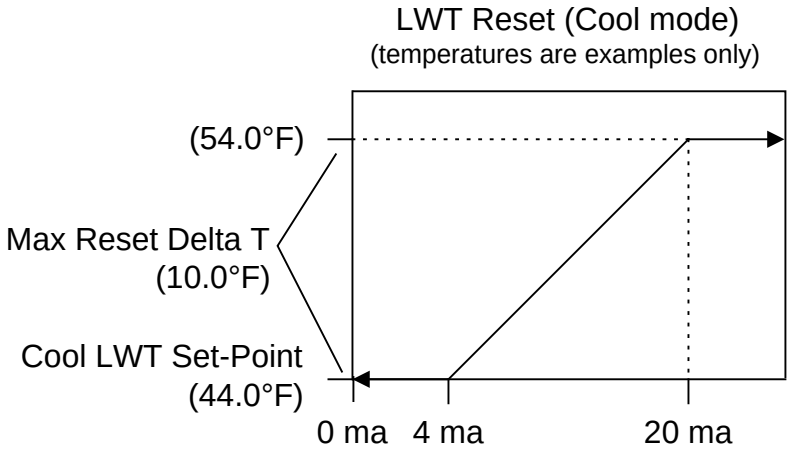

Reset Type – Outside Air Temperature (OAT)

The Active Leaving Water variable is reset based on the outdoor ambient temperature. Parameters used:

1. Cool LWT setpoint
2. Max Reset setpoint
3. OAT

Reset is 0 if the outdoor ambient temperature is greater than 75°F. From 75 down to 60°F the reset varies linearly from no reset to the max reset at 60 F. At ambient temperatures less than 60°F, reset is equal to the Max Reset setpoint.

Figure 7, Outside Air Reset

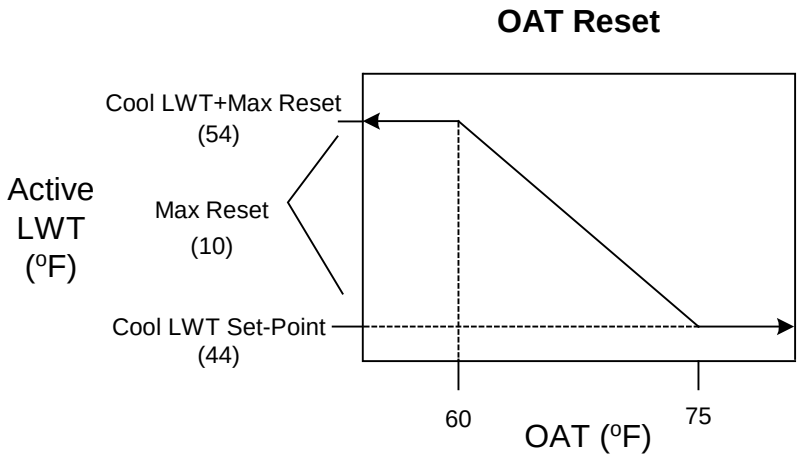

Situations may arise that require some action from the chiller or that should be logged for future reference. A condition that causes a shutdown and requires manual reset is known as a stop alarm. Other conditions can trigger what is known as an event, which may or may not require an action in response. All stop alarms and events are logged. The Unit Controller and the Circuit Controller have different Alarms and Events.

Unit Stop (Shutdown) Alarms

This table identifies each shutdown alarm, gives the condition that causes the alarm to occur, and states the action taken as a result of the alarm. (See the "Stop Alarms" section under the Circuit Controller for a description of these alarms.)

Table 21, Unit Stop Alarms

Description	Occurs When:	Action Taken
No Evaporator Water Flow	Evap Pump State = RUN AND Evap Flow Digital Input = No Flow for time > Flow Proof SP	Rapid Stop
Evaporator Freeze Protect	Evap LWT goes below evap freeze protect setpoint	Rapid Stop
Leaving Evaporator Water Temperature Sensor Fault	Sensor shorted or open	Rapid Stop
Outside Air Temperature Sensor Fault	Sensor shorted or open	Normal Shutdown
pLAN Failure	No other controller found on the pLAN for 60 seconds	Rapid Stop

The alarm output and red button LED shall be turned ON when any stop alarm occurs. They shall be turned OFF when all alarms have been cleared.

Unit Events

The following events only generate a warning message to the operator. Chiller operation is not affected. They are logged in the Event Log with a time stamp.

Table 22, Unit Events

Description	Occurs When:	Action Taken	Reset
Entering Evaporator Temperature Sensor Fault	Sensor is open or shorted	Cannot use return water temperature control	Automatic

Circuit Stop (Shutdown) Alarms

The following table identifies each circuit stop alarm, gives the condition that causes the alarm to occur, and states the action taken because of the alarm. All stop alarms require manual reset. Rapid stop alarms do not initiate a pumpdown before shutting off. All other alarms will initiate a pumpdown. The occurrence of a circuit stop alarm only affects the circuit on which it occurred.

Table 23, Circuit Stop Alarms

Description	Occurs When:	Action Taken
Low Evaporator Pressure	[Freezestat trip OR Evaporator Press < 5 psi OR Low Pressure Sw Open] AND Compressor State = Run	Rapid Stop
High Lift Pressure	Cond Sat Temp > Max Sat Cond Value	Rapid Stop
Mechanical High Pressure	Digital Input 6 = Open	Rapid Stop
Below Minimum Lift Pressure	Cond Press < Min Sat Cond Value for time > Min Lift Delay SP	Pumpdown
High Discharge Temperature	Temp > High Discharge Temperature SP	Rapid Stop
Low Oil Level	DI9 = Open for Time greater than Low Oil Level Delay AND the Low Oil Level Event has occurred in the past hour	Rapid Stop
High Oil Pressure Difference	Digital Input 5 = Open for time greater than High Press Diff Delay SP	Rapid Stop
VFD Fault	VFD option enabled and Digital Input 4 = Open	Pumpdown
Starter Fault	Digital Input 3 = Open	Rapid Stop
Evaporator Press. Sensor Fault	Sensor shorted or open	Rapid Stop
Condenser Press. Sensor Fault	Sensor shorted or open	Rapid Stop
Liquid Line Pressure Sensor Fault	Sensor shorted or open	Pumpdown
Suction Temp. Sensor Fault	Sensor shorted or open	Pumpdown
Discharge Temp. Sensor Fault	Sensor shorted or open	Pumpdown
Liquid Line Temp. Sensor Fault	Sensor shorted or open	Pumpdown
Slide Position Sensor Fault	Sensor shorted or open	Pumpdown

Evaporator Freezestat

Freezestat logic allows the circuit to run for varying times at low pressures. The lower the pressure, the shorter the time the compressor can run. This time is calculated as follows:

Freeze error = Low Evaporator Pressure Unload – Evaporator Pressure

Freeze time = 60 – 6.25(freeze error), limited to a range of 10-60 seconds

When the evaporator pressure goes below the Low Evaporator Pressure Unload setpoint, a timer starts. If this timer exceeds the freeze time, then a freezestat trip occurs. If the evaporator pressure rises to the unload setpoint or higher, and the freeze time has not been exceeded, the timer will reset.

Maximum Saturated Condenser Value

If Sat Evap Temp < 32 then

Max sat cond value = 155 + 1.588(Sat Evap Temp – 32)

If [Sat Evap Temp >= 32 AND Sat Evap Temp < 40] OR Circuit State = Pumpdown then

Max sat cond value = 155

If Sat Evap Temp >= 40 AND Sat Evap Temp < 55 then

Max sat cond value = 155 – 0.667(Sat Evap Temp – 40)

If Sat Evap Temp >=55 then

Max sat cond value = 145

Minimum Saturated Condenser Value

If Sat Evap Temp < 35, then

Min sat cond value = 73

If Sat Evap Temp >= 35 and < 55, then

Min sat cond value = (6/5)(Sat Evap Temp – 35) + 73

If Sat Evap Temp >= 55 then

Min sat cond value = 97

Circuit Events

The following events do not cause compressor shutdown but limit operation of the circuit in some way as described in the Action Taken column. The occurrence of a circuit event only affects the circuit on which it occurred.

Table 24, Circuit Events

Description	Occurs When:	Action Taken	Reset
Low Evaporator Pressure - Hold	Pressure < Low Evap Pressure - Hold SP	Inhibit loading	Evap Press rises above (SP + 3psi)
Low Evaporator Pressure - Unload	Pressure < Low Evap Pressure -Unload SP	Unload	Evap Press rises above (SP + 5psi)
High Lift Pressure - Hold	Pressure > High Sat Cond - Hold Value	Inhibit loading	Cond Press drops below (Hold Value – 10°F)
High Lift Pressure - Unload	Pressure > High Sat Cond - Unload Value	Unload	Cond Press drops below (Unload Value – 10°F)
Subcooling Low	EXV = Pressure Control AND Subcool < Low Subcool SP OR EXV = Subcool Control AND Subcool < (the lowest of the Low Subcool SP and sc target – 0.5°F) for longer than 5 minutes	None	Subcool > setpoint or Comp state = off
Discharge Superheat Low	EXV Control = Pressure Control AND Disc SH < Min SH Setpoint for 10 minutes	Pumpdown and stop	Comp state = off
Oil Level Low	DI9 = Open for Time greater than Low Oil Level Delay AND more than one hour since last occurrence	Rapid stop	Comp state = off
Failed Pumpdown	Circuit state = pumpdown for more than the Pumpdown Time SP	Stop	N/A
Power Loss While Running	Circuit controller is powered up after losing power while compressor was running	Delay start of compressor	N/A

High Saturated Condenser – Hold Value

High Cond Hold Value = Max Saturated Condenser Value – 5°F

High Saturated Condenser – Unload Value

High Cond Unload Value = Max Saturated Condenser Value – 3°F

Alarm and Event Logging

Alarm Logging

When an alarm occurs, the alarm type, date, and time are stored in the active alarm buffer corresponding to that alarm (viewed on the Alarm Active screens) and also in the alarm history buffer (viewed on the Alarm Log screens). The active alarm buffers hold a record of all current alarms. The active alarms can be cleared by pressing the Edit key when the end of the list has been reached by scrolling. Active alarms may be cleared only if a password is active.

A separate alarm log stores the last 25 alarms to occur. When an alarm occurs, it is put into the first slot in the alarm log and all others are moved down one, dropping the last alarm. In the alarm log, the date and time the alarm occurred are stored, as well as a list of other parameters. These parameters include unit state, OAT, LWT, and EWT for all alarms. If the alarm is a circuit alarm, then the circuit state, refrigerant pressures and temperatures, EXV control state, EXV position, slide position, and number of fans on are also stored.

Event Logging

An event log similar to the alarm log holds the last 25 events to occur. When an event occurs, it is put into the first slot in the event log and all other entries are moved down one, dropping the last event. Each entry in the event log includes an event description, as well as the time and date of the occurrence. No additional parameters are logged for events.

4x20 Display & Keypad

Layout

The 4-line by 20-character/line liquid crystal display and 6-key keypad for both the circuit controller and unit controller is shown below.

Figure 8, Display (in MENU mode) and Keypad Layout

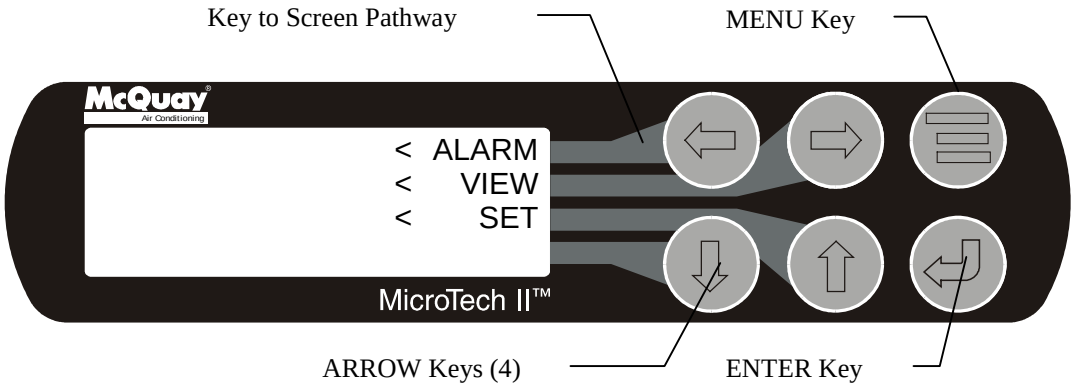

Note that each ARROW key has a pathway to a line in the display. Pressing an ARROW key will activate the associated line when in the MENU mode.

Arrow Keys

The four arrow keys (UP, DOWN, LEFT, RIGHT) have three modes of use.

1. Scroll between data screens as indicated by the arrows (default mode).
2. Select a specific data screen in a hierarchical fashion using dynamic labels on the right side of the display (this mode is entered by pressing the MENU key).
3. Change field values in edit mode according to the following table:

   LEFT Default
   RIGHT Cancel
   UP Increment
   DOWN Decrement

   These four edit functions are indicated by one-character abbreviations on the right side of the display (this mode is entered by pressing the ENTER key).

Getting Started-Press the MENU key to get started. The navigating procedures are the same for both the unit controller and the circuit controller.

MENU Key

The MENU key is used to switch between the MENU mode as shown in Figure 8 and the SCROLL mode as shown in Figure 9. The MENU mode is basically a shortcut to specific groups of menus used for checking ALARMS, for VIEWING information, or to SET setpoint values. The SCROLL mode allows the user to move about the matrix (from one menu to another, one at a time) by using the four ARROW keys.

When in the MENU mode (as shown in Figure 8), pressing the LEFT ARROW key will select the ALARM menus, the RIGHT ARROW key will select the VIEW menus and the

UP key the SET menus. The controller will go the next lower menu in the hierarchy, and then other menus can be accessed by using the ARROW keys. Pressing the MENU key from any menu screen will automatically return to the MENU mode as shown in Figure 8.

Another way to navigate through the menus is to press the MENU key when in the MENU mode (as above). This will switch the controller to the SCROLL mode. The controller will automatically go to the first screen as shown below (the upper-left menu on the menu matrix shown in Table 25 on page 32. From there, the four ARROW keys can be used to scroll up, down, or across to any other menu.

Figure 9, Display (in SCROLL Mode) and Keypad Layout

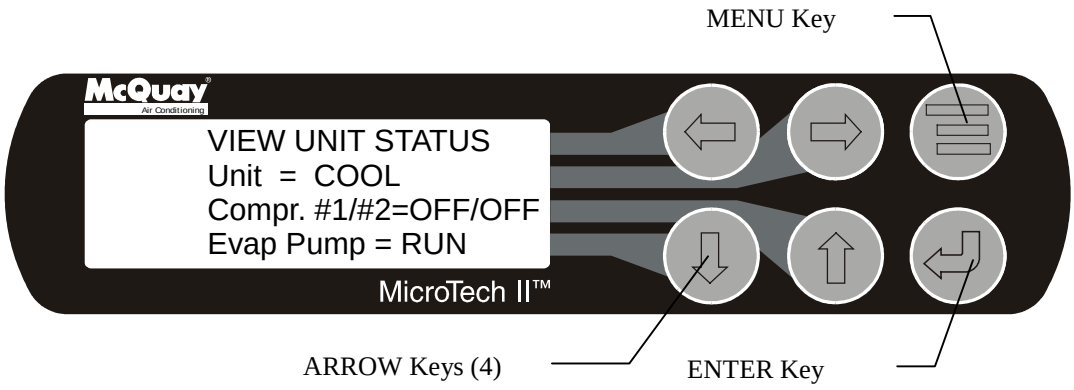

ENTER Key

Pressing the ENTER key changes the function of the ARROW keys to the editing function as shown below:

LEFT key, Default, changes a value to the factory-set default value.

RIGHT key, Cancel, cancels any change made to a value and returns to the original setting.

UP key, Increment, increases the value of the setting

DOWN key, Decrement decreases the value of a setting.

These four edit functions are indicated by one-character abbreviation on the right side of the display (this mode is entered by pressing the ENTER key).

Most menus containing setpoint values have several different setpoints shown on one menu. When in a setpoint menu, the ENTER key is used to proceed from the top line to the second line and on downward. The cursor will blink at the entry point for making a change. The ARROW keys (now in the edit mode) are used to change the setpoint as described above. When the change has been made, press the ENTER key to enter it. Nothing is changed until the ENTER key is pressed.

For example, to change the chilled water setpoint:

1. Press MENU key to go to the MENU mode (see Figure 8).
2. Press SET (the UP Key) to go to the setpoint menus.
3. Press UNIT SPs (the Right key) to go to setpoints associated with unit operation.
4. Press the DOWN key to scroll down through the setpoint menus to the third menu which contains Evap LWT=XX.X°F
5. Press the ENTER key to move the cursor down from the top line to the second line in order to make the change.

6. Use the ARROW keys (now in the edit mode as shown above) to change the setting.
7. When the desired value is achieved, press ENTER to enter it and also move the cursor down.

At this point, the following actions can be taken:

1. Change another setpoint in this menu by scrolling to it with the ENTER key
2. Using the ENTER key, scroll to the first line in the menu. From there the ARROW keys can be used to scroll to different menus.

Security

All setpoints on the unit controller as well as the circuit controllers are protected using passwords. Two four-digit passwords shall provide OPERATOR and MANAGER levels of access to changeable parameters.

Entering Passwords

Passwords can be entered using the ENTER PASSWORD screen on the unit controller, which is the last screen in the Unit SPs column. The password is entered by pressing the ENTER key, scrolling to the correct value with the UP and DOWN arrow keys, and pressing ENTER again. The entered password shall not be shown after the enter key is pressed.

Once the correct password has been entered, the ENTER PASSWORD screen shall indicate which password is active (none, operator, or manager). If the wrong password is entered, a message will temporarily appear stating this. If no valid password is active the active password level displays “none”.

Entering an incorrect password while a password is active will render that password inactive. Entering a valid password that is not the same as the active password will result in the active password level being changed to reflect the new password level.

Editing Setpoints

After a valid password has been entered at the unit controller, setpoints on the circuit controllers and the unit controller may be changed. If the operator attempts to edit a setpoint for which the necessary password level is not active, no action will be taken.

Once a password has been entered, it shall remain valid for 60 minutes after the last key-press on the unit controller.

Clearing Alarms

Alarms may be cleared at the unit controller if any password level is active. If the user attempts to clear an alarm while no password is active, then the controller will automatically go to the ENTER PASSWORD screen. The user can then enter a password normally, and scroll back to the active alarm column to clear the active alarm(s).

Unit Controller Menus

Various menus are shown in the controller display. Each menu screen shows specific information. In some cases menus are used only to *view* status of the unit, in some cases they are used for checking *alarms*, and in some case they are used to *set* the setpoint values that can be changed.

The menus are arranged in a matrix of screens across a top horizontal row. Some of these top-level screens have sub-screens located under them. The content of each screen and its location in the matrix are shown in Table 25. A description of each menu begins on page 33.

The ARROW keys on the controller are used to navigate through the menus. The keys are also used to change numerical setpoint values contained in certain menus.

As an alternate to selecting screens with the menu function, it is possible to scroll through all of them with the 4 arrow keys. For this use, the screens are arranged logically in a matrix as shown below.

Table 25, Unit Controller Menu Structure

VIEW MENUS								
VIEW UNIT STATUS (1)	VIEW UNIT TEMP (2)	VIEW CIR #1 (1)	VIEW CIR #2 (1)	VIEW CIR #3 (1)	VIEW REFRG CIR #1 (1)	VIEW REFRG CIR #2 (1)	VIEW REFRG CIR #3 (1)	VIEW FANS On-Off (1)
VIEW UNIT STATUS (2)	VIEW UNIT TEMP (2)	VIEW CIR #1 (2)	VIEW CIR #2 (2)	VIEW CIR #3 (2)	VIEW REFRG CIR #1 (2)	VIEW REFRG CIR #2 (2)	VIEW REFRG CIR #3 (2)	VIEW FANS VFD (2)
VIEW UNIT STATUS (3)					⇓	⇓	⇓	**Right half of table continued below**
					VIEW REFRG CIR #1 (5)	VIEW REFRG CIR #2 (5)	VIEW REFRG CIR #3 (5)	

Continued

Right half of table continued from above

ALARM MENUS			SET MENUS				
EVENT LOG (1)	ALARM LOG (1)	ALARM ACTIVE (1)	SET UNIT SPs (1)	SET COMP SP (1)	SET ALARM LMTS (1)	SET SENSOR OFFSET	TEST UNIT
⇓	⇓	⇓	SET UNIT SPs (2)	SET COMP SP (2)	SET ALARM LMTS (2)		
EVENT LOG (25)	ALARM LOG (25)	ALARM ACTIVE (n)	SET UNIT SPs (3)	SET COMP SP (3)	SET ALARM LMTS (3)		
			SET UNIT SPs (4)		SET ALARM LMTS (4)		
			SET UNIT SPs (5)				
			SET UNIT SPs (6)				
			⇓				
			SET UNIT SPs (to 12)				

Selection can then be made by using the LEFT/RIGHT keys to move between columns and the UP/DOWN keys to move between rows. The memory allows the return to the last screen viewed in each column. (This feature also applies to navigation using the function keys.) As an example:

> If the VIEW COMP#2 (3) screen is being viewed and the RIGHT arrow key is pressed, the display will show VIEW EVAP. If the LEFT arrow key is then pressed, the display will show VIEW COMP#2 (3) again (not VIEW COMP (1)).

Attempts to scroll past the limits of the matrix are ignored.

Screen Definitions

The following section illustrates all the unit screens. The screens are listed in the order of the matrix, starting from the upper-left. Unit view screens are used to view the operation of a circuit's compressor, refrigerant condition, EXV position, and fan operation. No settings are entered to these screens.

View Unit Status

```
VIEW UNIT STATUS (1)
Auto

Evap Pump= run
```

```
VIEW UNIT STATUS (2)
Softload Limit=100.0
Demand Limit=100.0
Network Limit=100.0
```

The unit will limit loading to the lowest of the three limit values that are active.

```
VIEW UNIT STATUS (3)
Unit Capacity=xxx.x%
```

```
VIEW UNIT STATUS (4)
      1 2 3 4
D.O.  0 1 0 0
D.I.  1 1 1 0
```

This screen gives the status of Digital Outputs (D.O.) and Digital Inputs (D.I.) as defined in Table 4and Table 3. 0=Off, 1=On.

```
VIEW UNIT TEMP   (1)
Evap LWT= XXX.X F
Evap EWT= XXX.X F
Active SP= XXX.X F
```

```
VIEW UNIT TEMP   (2)
LWT Pulldn= 0.0 F/m
Evap Delta T=XX.X F
Outdoor Air=XXX.X F
```

NOTE: In the following VIEW CIRCUIT screens, the N field indicates which compressor (#1, #2, etc.) is being viewed.

```
VIEW CIR N STATUS(1)
Off:Ready
Slide Position=000.0%
Slide Target=000.0%
```

Slide position and slide target are explained on page 14.

```
VIEW CIR N STATUS(2)
Hours  = XXXXX
Starts = XXXXX
```

```
VIEW REFR CIR N (1)
Evap Press=XXX.X psi
Cond Press=XXX.X psi
Liq Press= XXX.X psi
```

```
VIEW REFRG CIR N (2)
Sat Evap= XXX.X °F
Sat Cond= XXX.X °F
Sat LiqLine= XXX.X°F
```

```
VIEW REFRG CIR N (3)
Suct Temp = XXX.X °F
Disc Temp = XXX.X °F
Liq Temp = XXX.X °F
```

```
VIEW REFRG CIR N (4)
Suct SH = XXX.X °F
Disc SH= XXX.X °F
Liquid SC= XXX.X °F
```

```
VIEW REFRG CIR N (5)
Evap Approach=XX.X°F
Cond Approach=XX.X°F
EXV position = XXXX
```

```
VIEW FANS        (1)
Fans On, Cir 1= 0
Fans On, Cir 2= 0
Fans On, Cir 3= 0
```

```
VIEW FANS        (2)
VFD Cir 1= 000.0 %
VFD Cir 2= 000.0 %
VFD Cir 3= 000.0%
```

ALARM and EVENT Screen Definitions

The alarms and events shown are examples only. Any possible alarm or event could be shown. The alarm log and event log can show up to the 25 most recent occurrences.

```
ALARM LOG: (1)
Alarm Description
hh:mm:ss dd/mmm/yyyy
Parameters
```

```
EVENT LOG (1)
Event Description
hh:mm  mm/dd/yy
```

```
ALARM ACTIVE (1)
hh:mm  mmm/dd/yy
Alarm Description
```

SET Screen Definitions

Setpoints shown are typical. Entries can be selected by scrolling through the available possibilities. Setpoint ranges and choices are show in Table 13 on page 20.

Unit Setpoints

```
SET UNIT SPs     (1)
Enable=On
Mode= COOL
Source = KEYPAD
```

```
SET UNIT SPs     (2)
Available Modes = COOL

Select w/Unit Off
```

```
SET UNIT SPs     (3)
Cool LWT =  XX.X°F
Ice LWT – XX.X°F
```

The unit will only use the setpoint for the Mode selected.

```
SET UNIT SPs     (4)
StartDelta= XX.X°F
StopDelta= XX.X°F
StageDeltaT= XX.X°F
```

The StartDelta is the number of degrees above the chilled water setpoint the water temperature must rise for a compressor to start when no compressors are running. The default is 10 deg. F., the range is 0 to 10 deg. F. Settings below 10 degrees will increase the compressor cycling.

The StopDelta is the number of degrees below the chilled water setpoint the water temperature must fall for the last compressor to stop.

The StageDeltaT is the number of degrees change in the chilled water to initiate a change in staging.

```
SET UNIT SPs     (5)
Max Pulldn=X.X°F/min
EvapRecTimer=XXX sec
Evap Pump= #1 only
```

The unit can start either of two chilled water pumps. This menu selects which pump will start.

```
SET UNIT SPs     (6)
Reset Type =none
MaxResetDT =XX.X°F
StrtResetDT=XX.X°F
```

```
SET UNIT SPs     (7)
Soft Load   = Off
Begin Capacity= XXX%
SoftLoadRamp= XXmin
```

```
SET UNIT SPs     (8)
Demand Limit= Off
```

```
SET UNIT SPs     (9)
       CLOCK
     dd/mmm/yyyy
       hh:mm:ss
```

```
SET UNIT SPs    (10)
Units = °F/psi
Lang  = ENGLISH
```

Inch-Pound units of measure and English language are the only options available in this version.

```
SET UNIT SPs    (11)
Protocol=
Ident Number=
Baud Rate=
```

```
SET UNIT SPs    (12)
Enter Password:0000
 Active Password
 Level:none
```

Compressor (Circuit) Setpoints

```
SET COMP SPs     (1)
Seq # Comp 1=
Seq # Comp 2=
Seq # Comp 3=
```

```
SET COMP SPs     (2)
Max Comprs On = X
Start-Start = XXmin
Stop-Start = XXmin
```

```
SET COMP SPs     (3)
Pumpdn press=XX.X psi
Pumpdn time= XXX sec
```

```
SET ALARM LMTS   (1)
LowEvPrHold=XXXpsi
LowEvPrUnld=XXXpsi
```

```
SET ALARM LIMITS (2)
LowEvPrDel= XXX sec
LowOilDelay= XXX sec
HighOilDpDel=XXX sec
```

```
SET ALARM LIMITS (3)
MinLiftDel= XXX sec
Low Subcool= XX.X°F
High Disc Temp=XXX°F
```

```
SET ALARM LIMTIS (4)
Evap Freeze= XX.X°F
Low Amb Lock= XX.X°F
Evap Flow Proof=XXX
```

```
SET SENSOR OFFSET
OAT= XX.X°F
Evap LWT= XX.X°F
Evap EWT= XX.X°F
```

TEST Screen Definitions

```
TEST UNIT
Alarm Out=Off
Evap Heaters=Off
Pump1=Off  Pump 2=Off
```

Circuit Controller Menus

See "Using the Controller" on page 29 for information on how to navigate and use the menu screens, as well as changing setpoints. As an alternate to selecting screens with the menu function, it is possible to scroll through all of them with the 4 arrow keys. For this use, the circuit controllers' screens are arranged logically in a matrix as shown below.

Table 26, Circuit Controller Screen Matrix

"VIEW" SCREENS				"SET" SCREENS				"TEST" SCREENS
VIEW UNIT	VIEW CIR (1)	VIEW REFRG (1)	VIEW FANS (1)	SET COMP SPs	SET EXV SPs (1)	SET FANS (1)	SET SENSOR OFFSETS (1)	TEST COMP (1)
	VIEW CIR (2)	VIEW REFRG (2)	VIEW FANS (2)	SET COMP SPs (2)	SET EXV SPs (2)	SET FANS (2)	SET SENSOR OFFSETS (2)	TEST COMP (2)
	VIEW CIR (3)	VIEW REFRG (3)				SET FANS(3)	SET SENSOR OFFSETS (3)	TEST COMP (3)
	VIEW CIR (4)	VIEW REFRG (4)				SET FANS (4)		
	VIEW CIR (5)	⇓				⇓		
	VIEW CIR (6)	VIEW REFRG (7				SET FANS (6)		

Screen Definitions

VIEW Screens

Circuit VIEW screens are used to view the operation of a circuit's compressor, refrigerant condition, EXV position, and fan operation. No settings are made on these screens.

```
VIEW UNIT        (1)
Auto

Evap pump = Run
```

```
VIEW UNIT        (2)
Evap LWT= XXX.X°F
Active SP= XX.X°F
LWT pulldn= XX.X°F/m
```

```
VIEW CIR STATUS  (1)
Off:Ready
Slide Pos= XXX.X%
Slide Target= XXX.X%
```

```
VIEW CIR STATUS  (2)
Hours  = XXXXX
Starts = XXXXX
```

AIN is the analog input from the slide position indicator expressed in “counts”.

```
VIEW CIR STATUS  (3)
  Digital Outputs
1 2 3 4 5 6 7 8 9 10
0 0 0 0 0 0 0 0 0 0
```

The digital outputs in menu 3 and the analog outputs in menu 4 are defined in Table 2 and Table 4 beginning on page 7. “0”=Off, “1”= ON.

```
VIEW CIR STATUS  (4)
  Digital Outputs
11 12 13
0  0  0
```

```
VIEW CIR STATUS   (5)
   Analog Outputs
    (volts X 100)
1=XXXX   3=XXXX
```

```
VIEW CIR STATUS  (6)
  Digital Inputs
1 2 3 4 5 6 7 8 9
0 0 0 0 0 0 0 0 0
```

```
VIEW REFRIGERANT  (1)
Evap Press=XXX.X psi
Cond Press=XXX.X psi
Liq Press= XXX.X psi
```

```
VIEW REFRIGERANT  (2)
Sat Evap = XXX.X °F
Sat Cond = XXX.X °F
Sat LiqLine= XXX.X °F
```

```
VIEW REFRIGERANT  (3)
Suct Temp = XXX.X °F
Disc Temp = XXX.X °F
Liq Temp = XXX.X °F
```

```
VIEW REFRIGERANT  (4)
Suct SH =  XXX.X °F
Disc SH=   XXX.X °F
Liquid SC= XXX.X °F
```

```
VIEW REFRIGERANT  (5)
Evap Approach=XX.X °F
Cond Approach=XX.X °F
```

```
VIEW REFRIGERANT  (6)
MaxCondSatT=XXX.X°F
EXV Control=Pressure
Press target=XX.X°F
```

```
VIEW REFRIGERANT  (7)
EXV Steps= XXXX
EXV ctrl range:
 XXXX – XXXX steps
```

```
VIEW FANS         (1)
VFD Speed= XXX.X%
Fans Running= X
VFD Target=XXX.X °F
```

```
VIEW FANS          (2)
Target Sat T=XXX.X °F
Stage Up Err= XXX
Stage Dn Err= XXX
```

SET Screen Definitions

```
SET COMP SPs       (1)
Clear Cycle Tmr=no
Comp Size=XXX
Max Slide- XXX.X%
```

Clearing the anti-recycle timer is a one-time event. If "yes" is selected, the timer will go to zero but will then revert back to the original setting for any future occurrences.

```
SET COMP SPs       (2)
Circuit Mode=Enable
Slide Control=auto
Slide Pos= XXX.X%
```

```
SET EXV SPs
EXV Control=auto
Manual EXV Pos=XXXX
Pre-open time=XXX sec
```

```
SET FAN SPs        (1)
Fan VFD = no
Number of fans = X
```

```
SET FAN SPs        (2)
Stg Up Deadband(°F)
Stg1=XXX    Stg3=XXX
Stg2=XXX    Stg4=XXX
```

```
SET FAN SPs        (3)
Stg Down Deadband(°F)
Stg1=XXX    Stg3=XXX
Stg2=XXX    Stg4=XXX
```

```
SET FAN SPs        (4)
VFD Min speed= XXX%
VFD Max speed= XXX%
```

```
SET FAN SPs       (5)
Cond Sat Temp Target
Setpoint= XXX.X °F
```

```
SET FAN SPs       (6)
# Fans On At Startup
>75°F  >90°F   >105°F
  X     X       X
```

```
SET SENSOR OFFSET (1)
Evap Press= XX.X psi
Cond Press= XX.X psi
Liq Press= XX.X psi
```

```
SET SENSOR OFFSET (2)
Suct Temp= X.X F
Disch Temp= X.X F
Liq Temp= X.X F
```

```
SET SENSOR OFFSET (3)
Slide min pos=XX%
Slide max pos=XX%
Slide Pos=XXX.X%
```

```
TEST CIRCUIT      (1)
Fans:1=Off    2=Off
     3=Off    4=Off
   5/6=Off  7/8=Off
```

```
TEST CIRCUIT      (2)
Slide Dir= Unload
Slide Pulse= Off
```

```
TEST CIRCUIT      (3)
Oil Return= Off
EXV Closed= Off
```

```
TEST CIRCUIT      (4)
Fan VFD Spd%= XXX.X
EXV Position=XXXX
```

Entering Passwords

Passwords can be entered using the ENTER PASSWORD screen on the unit controller, which is the last screen in the Unit SPs column. The password is entered by pressing the ENTER key, scrolling to the correct value with the UP and DOWN arrow keys, and pressing ENTER again. The entered password will not be shown after the enter key is pressed.

Once the correct password has been entered, the ENTER PASSWORD screen shall indicate which password is active (none, operator, or manager). If the wrong password is entered, a message will temporarily appear stating this. If no valid password is active, the active password level displays “none”.

Entering an incorrect password while a password is active will render that password inactive. Entering a valid password, that is not the same as the active password, will result in the active password level being changed to reflect the new password level.

Editing Setpoints

After a valid password has been entered at the unit controller, setpoints on the circuit controllers and the unit controller may be changed. If the operator attempts to edit a setpoint for which the necessary password level is not active, no action will be taken.

Once a password has been entered, it shall remain valid for 60 minutes after the last key-press on the unit controller.

Clearing Alarms

Alarms may be cleared at the unit controller if any password level is active. If the user attempts to clear an alarm while no password is active, then the controller will automatically go to the ENTER PASSWORD screen. The user can then enter a password normally, and scroll back to the active alarm column to clear the active alarm(s).

Sequence of Operation

The following sequence of operation is typical for McQuay models AGS chillers. The sequence may vary depending on the software revision or various options that may be installed on the chiller.

Off Conditions

Power is supplied to each power panel located between condenser sections. Optionally, the power may be supplied to a single power connection in a terminal box located on the base of the unit.

With power supplied to the unit, 115 VAC power is applied through the control fuse F1 to the compressor heaters (HTR1, HTR2, (and HTR3), and evaporator heater and the primary of the 24V control circuit transformer.

⚠ WARNING

Compressor heaters must be on for at least 12 hours prior to start-up to avoid compressor damage.

The 24V transformer provides power to the MicroTech II controller and related components. With 24V power applied, the controller will check the position of the front panel system switch. If the switch is in the "stop" position, the chiller will remain off and the display will indicate the operating mode to be **OFF: System Sw.** The controller will then check the pumpdown switches. If any of the switches are in the "stop" position, that circuit's operating mode will be displayed as **OFF: PumpDwnSw.** If the switches for both circuits are in the "Stop" position, the unit status will display **OFF: PumpdownSw's**. If the remote start/stop switch is open the chiller will be **OFF: RemoteSw**. The chiller may also be commanded off via communications from a separate communicating panel such a BAS protocol interface. The display will show **OFF: RemoteComm** if this operating mode is in effect. If an alarm condition exists which prevents normal operation of both refrigerant circuits, the chiller will be disabled and the display will indicate **OFF: Alarm**. If the control mode on the keypad is set to "Manual Unit Off," the chiller will be disabled and the unit status will display **OFF: ManualMode**. Assuming none of the above stop conditions are true, the controller will examine the internal time schedule to determine whether the chiller should be permitted to start. The operating mode will be **OFF: TimeClock** if the time schedule indicates time remaining in an "off" time period.

Alarm

The alarm light in back of the left arrow button on the controller will be illuminated when one or more of the cooling circuits has an active alarm condition which results in the circuit being locked out. Unless the alarm condition affects all circuits, the remaining circuits will operate as required.

Start-up

If none of the above "off" conditions are true, the MicroTech II controller will initiate a start sequence and energize the chiller water pump output relay. The chiller will remain in the **WaitForFlow** mode until the field installed flow switch indicates the presence of chilled water flow. If flow is not proven within 30 seconds, the alarm output will be turned on, the keypad display will be **WaitForFlow** and the chiller will continue to wait for proof of chilled water flow. Once flow is established, the controller will sample the chilled water temperature and compare it against the Leaving Chilled Water Setpoint, the Control Band, and the Start-up Delta-Temperature, which have been programmed into the controller's memory.

If the leaving chilled water temperature is above the Leaving Chilled Water Setpoint plus one-half of the Control Band plus the adjustable Start-up Delta-Temperature, the controller will select the refrigerant circuit with the lowest number of starts as the lead circuit and energize the first stage of the Cool Staging mode. The controller will start the compressor and energize the evaporator oil return solenoid. The controller will delay the opening of the electronic expansion valve until the evaporator pressure decreases to a preset value. This is the evaporator prepurge mode and the display will show **Pre-Purge**. The valve will then open, allowing refrigerant to flow through the expansion valve and into the evaporator and the display will show **Opened EXV**. If additional cooling capacity is required, the controller will energize the additional cooling capacity by activating the first compressor's capacity control solenoids. As the system load increases, the controller will start the lag refrigerant circuit in the same manner after interstage timers are satisfied. The compressors and capacity control solenoids will automatically be controlled as required to meet the cooling needs of the system. The electronic expansion valves are operated by the MicroTech II controller to maintain precise refrigerant control to the evaporator at all conditions.

Standard FanTrol Condenser Fan Control

The first condenser fan stage will be started along with the first compressor to provide initial condenser head pressure control. The MicroTech II controller will activate the remaining condenser fans as needed to maintain proper condenser pressure. The MicroTech II controller continuously monitors the condenser minus evaporator lift pressure and will adjust the number of operating condenser fans as required. The number of condenser fans operating will vary with outdoor temperature and system load. The condenser fans are matched to the operating compressors so that when a compressor is off, all fans for that circuit will also be off.

Pumpdown

As the system chilled water requirements diminish, the compressors will unload. As the system load continues to drop, the electronic expansion valves will be stepped closed and the refrigerant circuits will go through a pumpdown sequence. As the evaporator pressure falls below the pumpdown pressure setpoint while pumping down, the compressor(s) and condenser fans will stop. The unit has a one-time pumpdown control logic; therefore, if the evaporator pressure rises while the refrigerant circuit is in a pumpdown mode, the controller will not initiate another pumpdown sequence. The controller will keep the unit off until a call for cooling occurs.

The chilled water pump output relay will remain energized until the time schedule's "on" time expires, the remote stop switch is opened, the system switch is moved to the stop position, or a separate communications panel such as the Remote Monitoring and Sequencing Panel or an Open Protocol interface deactivates the chilled water pump output.

⚠ WARNING

The screw compressor must not be used as a pump-out compressor for service work involving removal of refrigerant from the compressor or evaporator. That is, the compressor must not be run with the liquid line valve (king valve) closed. Portable recovery equipment must be used to remove the refrigerant. Serious damage to the compressor could result.

Figure 10, AGS Piping Schematic

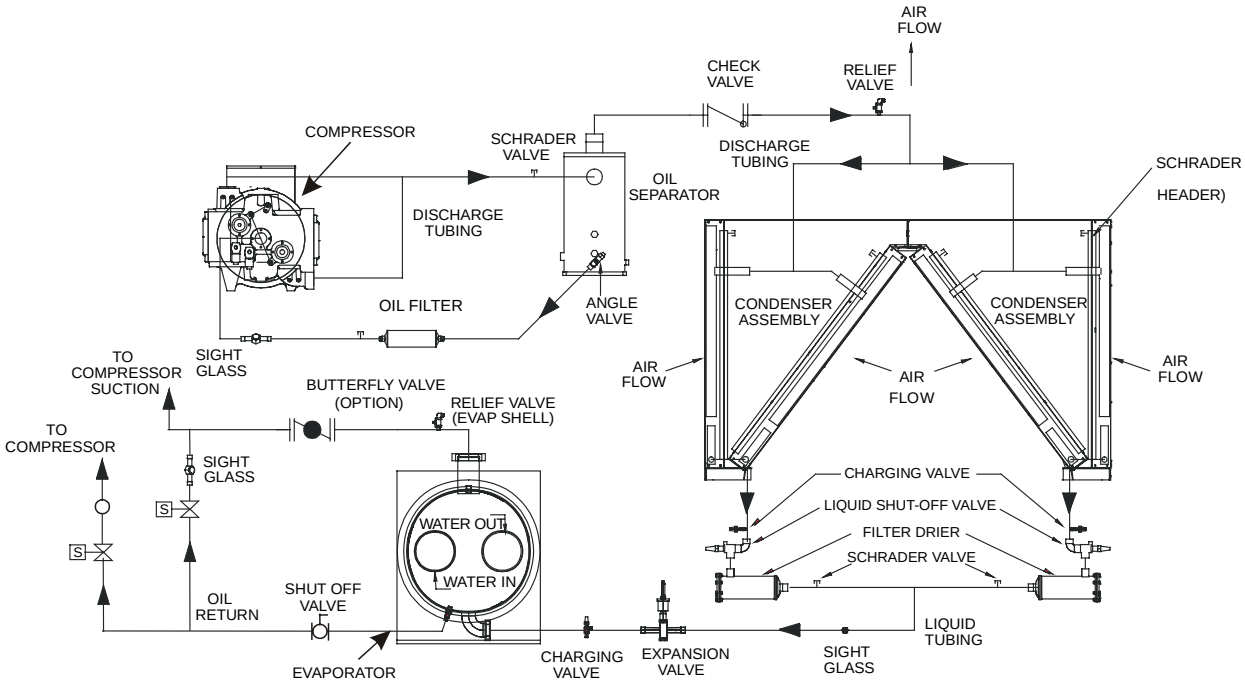

NOTICE

McQuayService personnel or factory authorized service agency must perform initial start-up in order to activate warranty.

CAUTION

Most relays and terminals in the unit control center are powered when S1 is closed and the control circuit disconnect is on. Therefore, do not close S1 until ready for start-up or the unit may start unintentionally.

Seasonal Start-up

1. Double check that the optional compressor suction butterfly valve is open. There is a check valve between the oil separator and condenser.
2. Check that the manual liquid-line shutoff valves at the outlet of the subcooler coils on each side of the unit are open.
3. Check the leaving chilled water temperature setpoint on the MicroTech II controller to be sure it is set at the desired chilled water temperature.
4. Start the auxiliary equipment for the installation by turning on the time clock, and/or remote on/off switch, and chilled water pump.
5. Check to see that pumpdown switches PS1 and PS2 are in the "Pumpdown and Stop" (open) position. Throw the S1 switch to the "auto" position.
6. Under the "Control Mode" menu of the keypad, place the unit into the automatic cool mode.
7. Start the system by moving pumpdown switch PS1 to the "auto" position.
8. After running circuit #1 for a short time, check for flashing in the refrigerant sightglass under stable conditions.
9. Repeat steps 8 and 9 for PS2.
10. Superheat is factory adjusted to maintain between 0° and 3°F.

NOTE

The superheat should be between 0°F and 3°F, with the liquid line sightglass full, once the system temperatures have stabilized at the MicroTech II setpoint temperatures.

Temporary Shutdown

Move pumpdown switches PS1 and PS2 to the "Pumpdown and Stop" position. After the compressors have pumped down, turn off the chilled water pump.

CAUTION

Do not turn the unit off using the "S1" switch, without first moving PS1 and PS2 to the "Stop" position, unless it is an emergency, as this will prevent the unit from going through a proper shutdown sequence.

CAUTION

The unit has a one-time pumpdown operation. When PS1 and PS2 are in the "Pumpdown and Stop" position the unit will pumpdown once and not run again until the PS1 and PS2 switches are moved to the auto position. If PS1 and PS2 are in the auto position and the load has been satisfied, the unit will go into one-time pumpdown and will remain off until the MicroTech II control senses a call for cooling and starts the unit. Under no circumstance use the compressors for pumpdown with the liquid line valves closed.

It is important that the water flow to the unit is not interrupted before the compressors pumpdown to avoid freeze-up in the evaporator.

CAUTION

If all power is turned off to the unit, the compressor heaters will become inoperable. Once power is resumed to the unit, it is important that the compressor and oil separator heaters are energized a minimum of 12 hours before attempting to start the unit. Failure to do so could damage the compressors due to excessive accumulation of liquid in the compressor.

Start-up After Temporary Shutdown

1. Insure that the compressor heaters have been energized for at least 12 hours prior to starting the unit.
2. Start the chilled water pump.
3. With System switch S1 in the "on" position, move pumpdown switches PS1 and PS2 to the "auto" position.
4. Observe the unit operation until the system has stabilized.

WARNING

If shutdown occurs, or will continue through periods below freezing ambient temperatures, protect the chiller vessel from freezing. See Freeze-Up Protection in this manual for more information.

Extended (Seasonal) Shutdown

1. Move the PS1 and PS2 switches to the manual pumpdown position.
2. After the compressors have pumped down, turn off the chilled water pump.
3. Turn off all power to the unit and to the chilled water pump.

4. Move the emergency stop switch S1 to the "off" position.
5. Close the optional compressor suction valve (if so equipped) as well as the liquid line shutoff valves.
6. Tag all opened compressor disconnect switches to warn against start-up before opening the compressor suction valve and liquid line shutoff valves.
7. If glycol is not used in the system, drain all water from the unit evaporator and chilled water piping if the unit is to be shutdown during winter. Do not leave the vessels or piping open to the atmosphere over the shutdown period.
8. Leave power applied to the evaporator heaters if a separate disconnect is used.

Start-up After Extended (Seasonal) Shutdown

1. With all electrical disconnects open, check all screw or lug-type electrical connections to be sure they are tight for good electrical contact.
2. Check the voltage of the unit power supply and see that it is within the ±10% tolerance that is allowed. Voltage unbalance *between* phases must be within ±3%.
3. See that all auxiliary control equipment is operative and that an adequate cooling load is available for start-up.
4. Check all compressor flange connections for tightness to avoid refrigerant loss. Always replace valve seal caps.
5. Make sure system switch S1 is in the "Stop" position and pumpdown switches PS1 and PS2 are set to "Pumpdown and Stop", throw the main power and control disconnect switches to "on." This will energize the crankcase heaters. Wait a minimum of 12 hours before starting up unit. Turn compressor circuit breakers to "off" position until ready to start unit.
6. Open the optional compressor suction butterfly as well as the liquid line shutoff valves.
7. Vent the air from the evaporator water side as well as from the system piping. Open all water flow valves and start the chilled water pump. Check all piping for leaks and recheck for air in the system.

Evaporator Freeze Protection

Flooded evaporators are popular with chiller manufacturers because of their inherent high efficiency. Care must be exercised in the equipment design and in the operation of these evaporators to prevent freezing between 32°F and -20°F.

For protection down to 0°F (-18°C), the AGS chillers are equipped with thermostatically controlled evaporator heaters that help protect against freeze-up provided the chiller goes through its normal pumpdown cycle. Several occurrences can prevent this normal pumpdown from happening:

1. A power failure will prevent pumpdown and there is a potential for freezing outdoor equipment in systems using 100 percent water as the chilled fluid.
2. Unit shutdown due to a fault will cause immediate compressor shutdown without the pumpdown cycle. This situation can be remedied by correcting the fault, restarting the unit, and allowing it to go through its normal shutdown pumpdown.

NOTE:

The heaters come from the factory connected to the control power circuit. The control power can be rewired to a separate 115V supply (do not wire directly to the heater). If this is done, the disconnect switch should be clearly marked to avoid accidental deactivation of the heater during freezing temperatures. Exposed chilled water piping also requires protection.

It is required that the chilled water pump's starter be wired to, and controlled by, the chiller's microprocessor. The controller will energize the pump whenever at least one circuit on the chiller is *enabled* to run, whether there is a call for cooling or not. The pump will also be energized when the controller senses a near-freezing temperature at the chiller outlet sensor to assist in cold weather freeze protection. Connection points are shown in Figure 11on page 53.

For additional protection to -20°F (-29°C) and to protect against the consequences described above, it is recommended that at least one of the following procedures be used during periods of sub-freezing temperatures

1. Addition of a concentration of a glycol anti-freeze with a freeze point 15 degrees below the lowest expected temperature. This will result in decreased capacity and increased pressure drop.

   Note: Do not use automotive grade antifreezes as they contain inhibitors harmful to chilled water systems. Only use glycols specifically designated for use in building cooling systems.

2. Draining the water from outdoor equipment and piping and blowing the chiller tubes dry from the chiller. Do not energize the chiller heater when water is drained from the vessel.

CAUTION

If fluid is absent from the evaporator, the evaporator heater must be de-energized to avoid burning out the heater and causing damage from the high temperatures.

3. Providing operation of the chilled water pump, circulating water through the chilled water system and through the evaporator. The chiller microprocessor will automatically start up the pump if so wired.

Table 27, Freeze Protection

Temperature °F (°C)	Percent Volume Glycol Concentration Required			
	For Freeze Protection		For Burst Protection	
	Ethylene Glycol	Propylene Glycol	Ethylene Glycol	Propylene Glycol
20 (6.7)	16	18	11	12
10 (-12.2)	25	29	17	20
0 (-17.8)	33	36	22	24
-10 (-23.3)	39	42	26	28
-20 (-28.9)	44	46	30	30
-30 (-34.4)	48	50	30	33
-40 (-40.0)	52	54	30	35
-50 (-45.6)	56	57	30	35
-60 (-51.1)	60	60	30	35

Notes:
1. These figures are examples only and cannot be appropriate to every situation. Generally, for an extended margin of protection, select a temperature at least 10°F lower than the expected lowest ambient temperature. Inhibitor levels should be adjusted for solutions less than 30% glycol.
2. Glycol of less than 20% concentration is not recommended because of the potential for bacterial growth and loss of heat transfer efficiency.

Operating Limits:

Maximum standby ambient temperature, 130°F (55°C)

Maximum operating ambient temperature, 115°F (46°C), or 125°F (52°C) with optional high ambient package

Minimum operating ambient temperature (standard), 35°F (2°C)

Minimum operating ambient temperature (optional low-ambient control), 0°F (-18°C)

Leaving chilled water range, 38°F to 50°F (3°C to 10°C)

Leaving chilled fluid range (with anti-freeze), 20°F to 50°F (7°C to 10°C)

Operating Delta-T range, 6 degrees F to 16 degrees F (10.8 C to 28.8 C)

Maximum operating inlet fluid temperature, 66°F (19°C)

Maximum startup inlet fluid temperature, 90°F (32°C)

Maximum non-operating inlet fluid temperature, 100°F (38°C)

NOTE: Contact the local McQuay sales office for operation outside of these limits.

Building Automation System Interface

Connection to Chiller

Connection to the chiller for all BAS protocols will be at the unit controller. An interface card, depending on the protocol being used, may have been factory installed in the unit controller (or it can be field installed).

Protocols Supported

Table 28, Standard Protocol Data

Protocol	Physical Layer	Data Rate	Controller	Other
BACnet®/IP	Ethernet 10 Base-T	10 Megabits/sec	Color graphics SBC	Reference ED 15057: BACnet PICS
BACnet MSTP	RS485	(TBD)	pCO^2 Unit Controller	Reference ED 15057: BACnet PICS
LonTalk®	FTT-10A	78kbits/sec	pCO^2 Unit Controller	LONMARK® Chiller Functional Profile
ModbusRTU	RS-485	(TBD)	pCO^2 Unit Controller	

NOTE: For additional information on the protocol data available through the BACnet or LonTalk communications modules, reference ED 15062, *MicroTech II Chiller Unit Controller Protocol Information.*

Modbus - When selected, the ident number and baud can also be changed to suit the application.

LONWORKS – When selected, the ident number and baud rate setpoints are not available. Baud rate is locked at 4800.

BACnet – When selected, the ident number and baud rate setpoints are not available. Baud rate is locked at 19200.

The factory installed kits on the MicroTech II™ controller are as follows:

- BACnet Kit P/N 350147404: BACnet/IP, BACnet MS/TP, or BACnet Ethernet
- LONWORKS Kit P/N 350147401: LonTalk (FTT-10A)
- ModbusRTU

The following functions are available through the BAS where possible. Exact capabilities may vary depending on the protocol in use.

- Enable/Disable chiller operation by setting the Unit Enable setpoint.
- Select the operating mode by setting the Unit Mode setpoint.
- Set the Cool LWT and Ice LWT setpoints.
- Set the Network Limit variable.
- Read all digital and analog I/O values.
- Read Enable status of chiller
- Read current operating mode and status (state) of chiller.
- Send a description of each alarm when it occurs.

Reference documents ED 15057 and ED 15062 may be obtained from the local McQuay sales office, from the local McQuayService office, or from the McQuay Technical Response Center, located in Staunton, Virginia (540-248-0711).

The above are trademarks or registered trademarks of their respective companies: BACnet from the American Society of Heating, Refrigerating and Air-Conditioning Engineers, Inc., LonTalk, LONMARK and LONWORKS from Echelon Corporation, and Modbus and ModbusRTU from Schneider Electric.

Field Wiring Diagram

Figure 11, Typical Field Wiring Diagram

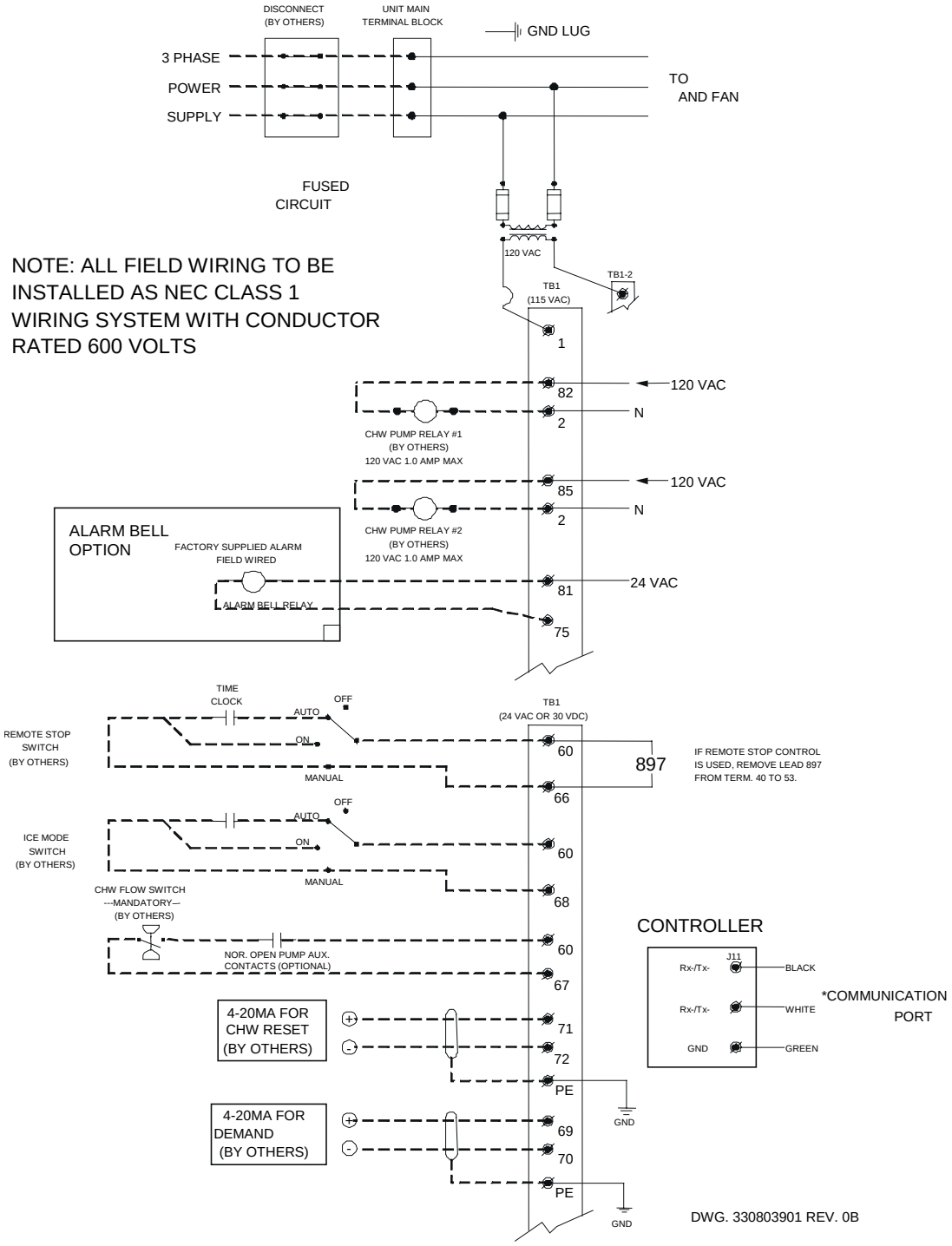

© 2002 McQuay International • (800) 432-1342 • www.mcquay.com